Product Portfolio

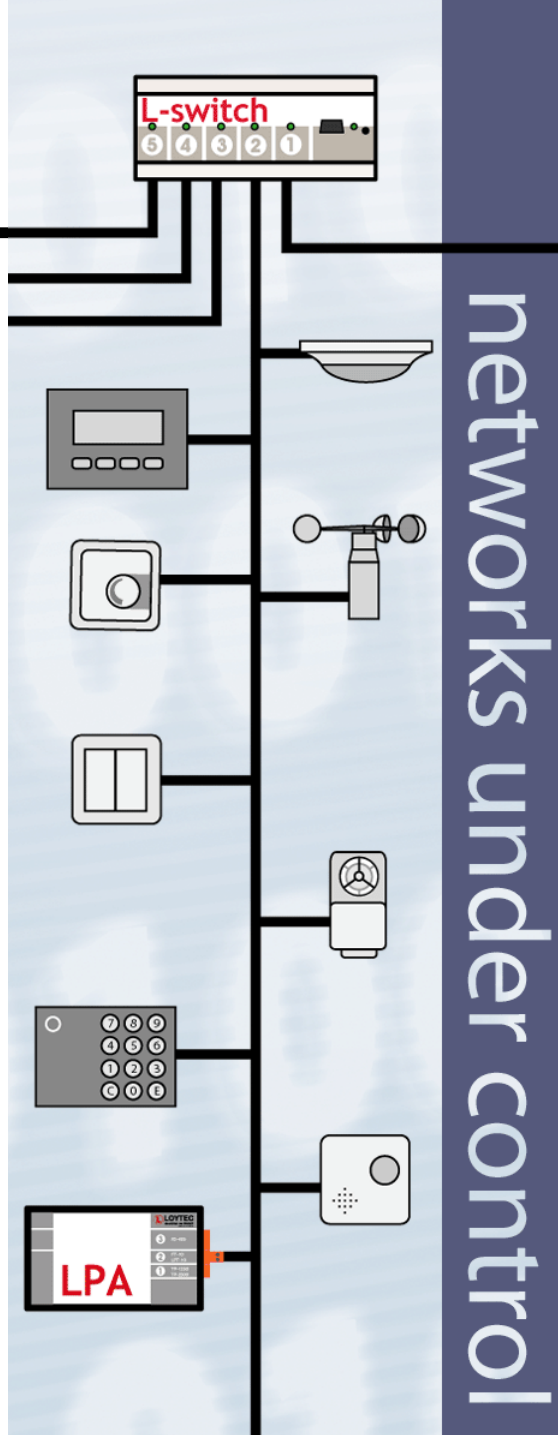

LOYTEC electronics GmbH

Stolzenthalergasse 24/3, A-1080 Vienna, Austria
http://www.loytec.com • info@loytec.com
tel.: +43-1-402 08 05-0 • fax.: +43-1-402 08 05-99

Overview

LOYTEC electronics GmbH

- About LOYTEC
- Network Interfaces
- Network Infrastructure Components
- Gateways
- System Diagnostics Tools
- Embedded Controllers
- Technology Products
- Professional Services

networks under control

Mission Statement

LOYTEC's mission is to provide cost effective, highly functional, user friendly, high performing network infrastructure products, debugging tools, and key technologies for control networks.

networks under control

LOYTEC electronics GmbH

- Founded in 1997
- Privately held
- 14 employees (9 EEs)
- Headquarter in Vienna, Austria
- Spin-Off from the University of Technology Vienna
- Distributors in USA, Japan, South Korea, United Arab Emirates, Kuwait, China, UK, Sweden, Norway, Finland, France, Germany, Switzerland, Belgium, Netherlands

Founders

LOYTEC electronics GmbH

- Dipl.-Ing. Hans-Joerg Schweinzer (President)
- Mag. Josef Wojak (CFO, VP Marketing and Sales)
- Dipl.-Ing. Dr. Dietmar Loy (CTO, COO)
- Dipl.-Ing. Alexander Bauer (Director SW Engineering)
- Dipl.-Ing. Andreas Döderlein (Director HW Engineering)

networks under control

Organization

LOYTEC electronics

Worldwide Logistics Center (WLC)

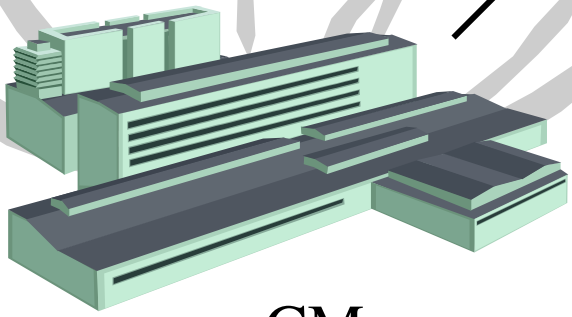

CM

networks under control

Network Interfaces (NICs)

NIC Overview

LOYTEC electronics GmbH

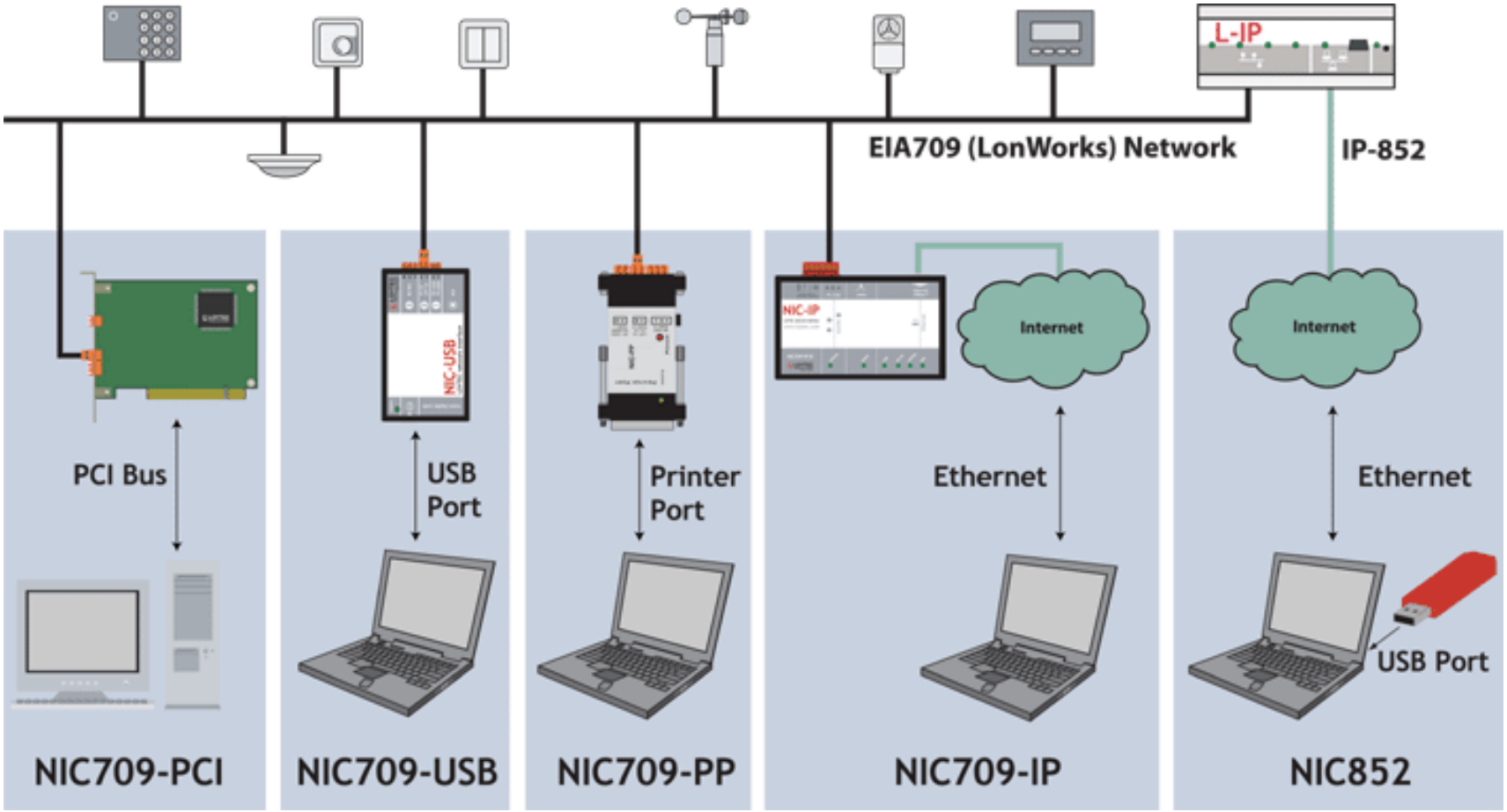

networks under control

NIC709-PP, NIC709-PCI, NIC709-USB, NIC709-IP

LOYTEC electronics GmbH

- L-Chip based high-speed EIA-709 network interface
- Available as PP, PCI, USB, and Ethernet device
- Software selectable transceivers: FT-10, TP-1250, RS-485, PLT-22
- Includes ORION Stack lib
- Supports multiple parallel transaction spaces
- 65535 address table entries
- 4096 network variables
- Up to 8 simultaneous network nodes (MNI)
- Compatible with LNS applications (LonMaker)
- Compatible with MIP applications (Nodeutil)
- Compatible with L-IP and i.LON1000 (NIC-852)
- Runs ORION, LNS, MIP, LPA, LSD Tool applications in parallel
- Use MIP applications with IP-852 channels
- Runs on all Windows® versions as well as Linux

networks under control

NIC709 Software Architecture

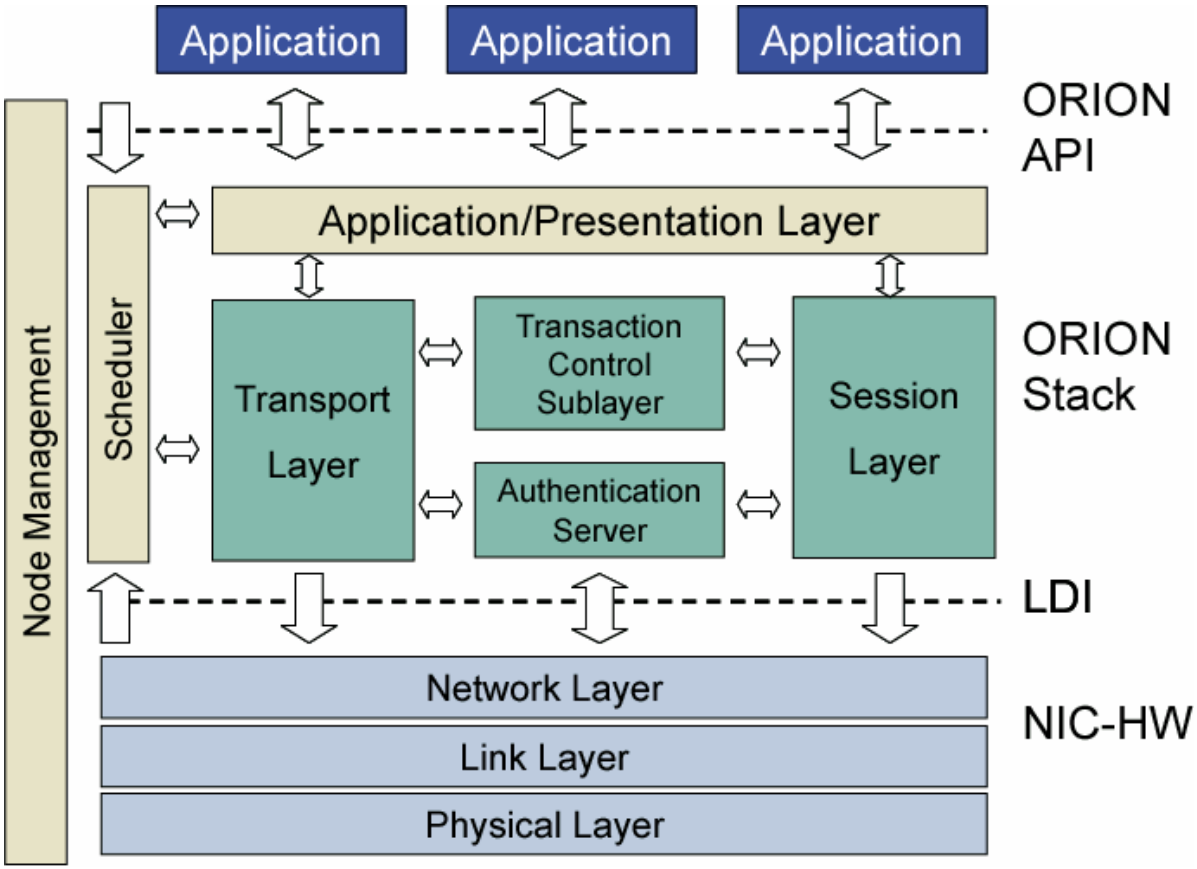

networks under control

NIC852

LOYTEC electronics GmbH

- Ethernet based high-speed EIA-709 network interface
- Interfaces to IP-852 LonMark channel
- Existing Ethernet hardware used as network interface
- Can be used together with L-IP or i.LON 1000 as interface to LonWorks FT-10 or TP-1250 channels
- Node-ID stored in USB key
- Supports multiple apps over one physical network interface
- Includes ORION Stack library
- Supports multiple parallel transaction spaces
- 65535 address table entries
- 4096 network variables
- Dynamic network variables
- Acts as 8 individual nodes
- Compatible with LNS applications (LonMaker)
- Compatible with MIP applications (Nodeutil)
- Use MIP applications with IP-852 channels
- Runs on all Windows® versions as well as Linux

networks under control

NIC852 Software Architecture

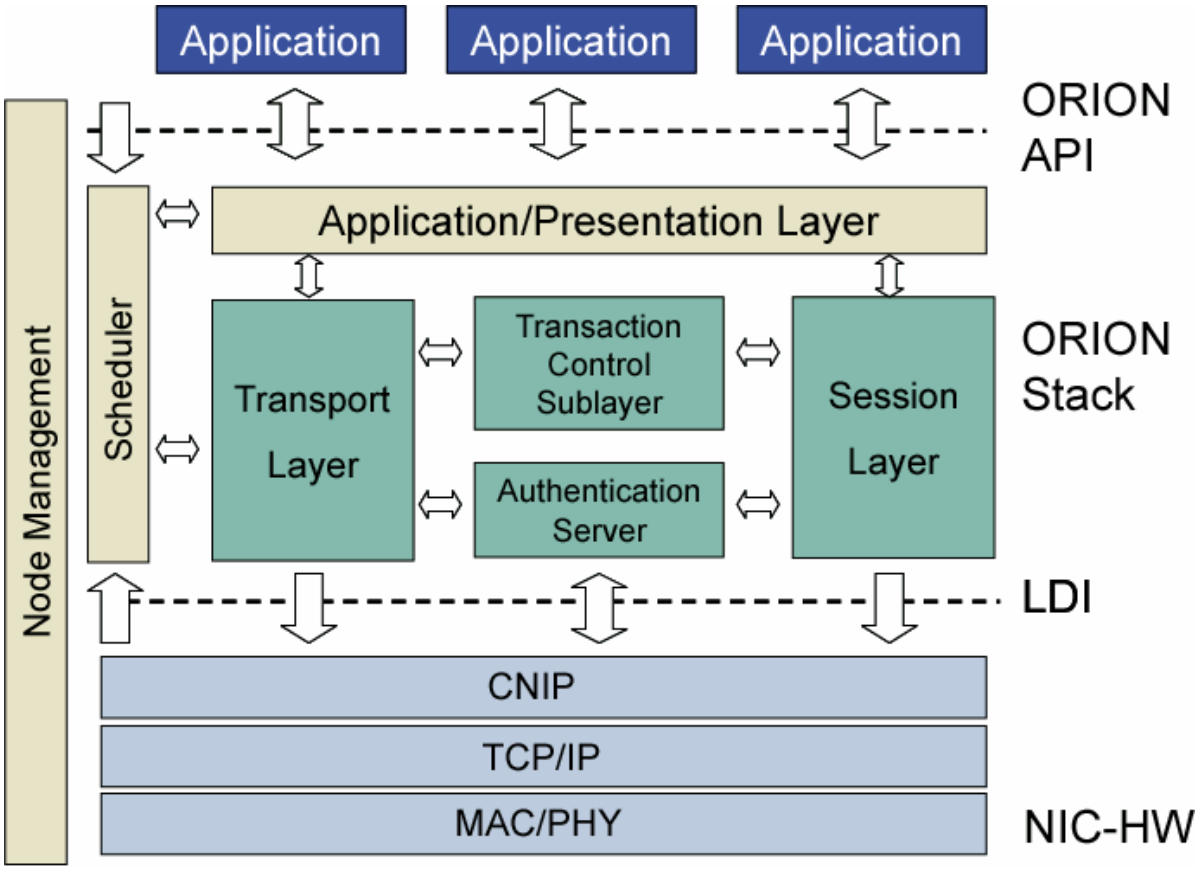

networks under control

NIC Application Examples

LOYTEC electronics GmbH

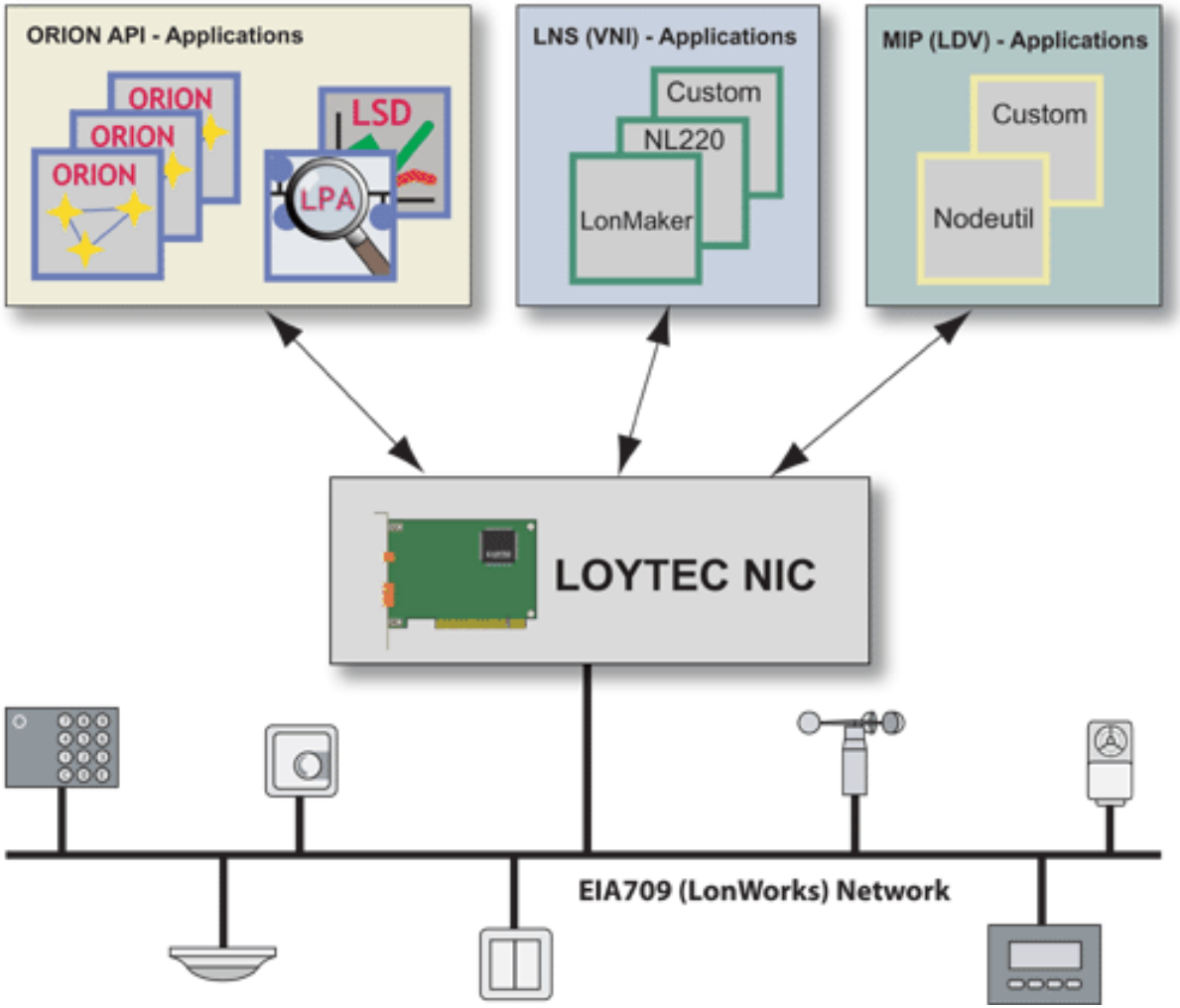

networks under control

Network Infrastructure

networks under control

Typical Network Architecture

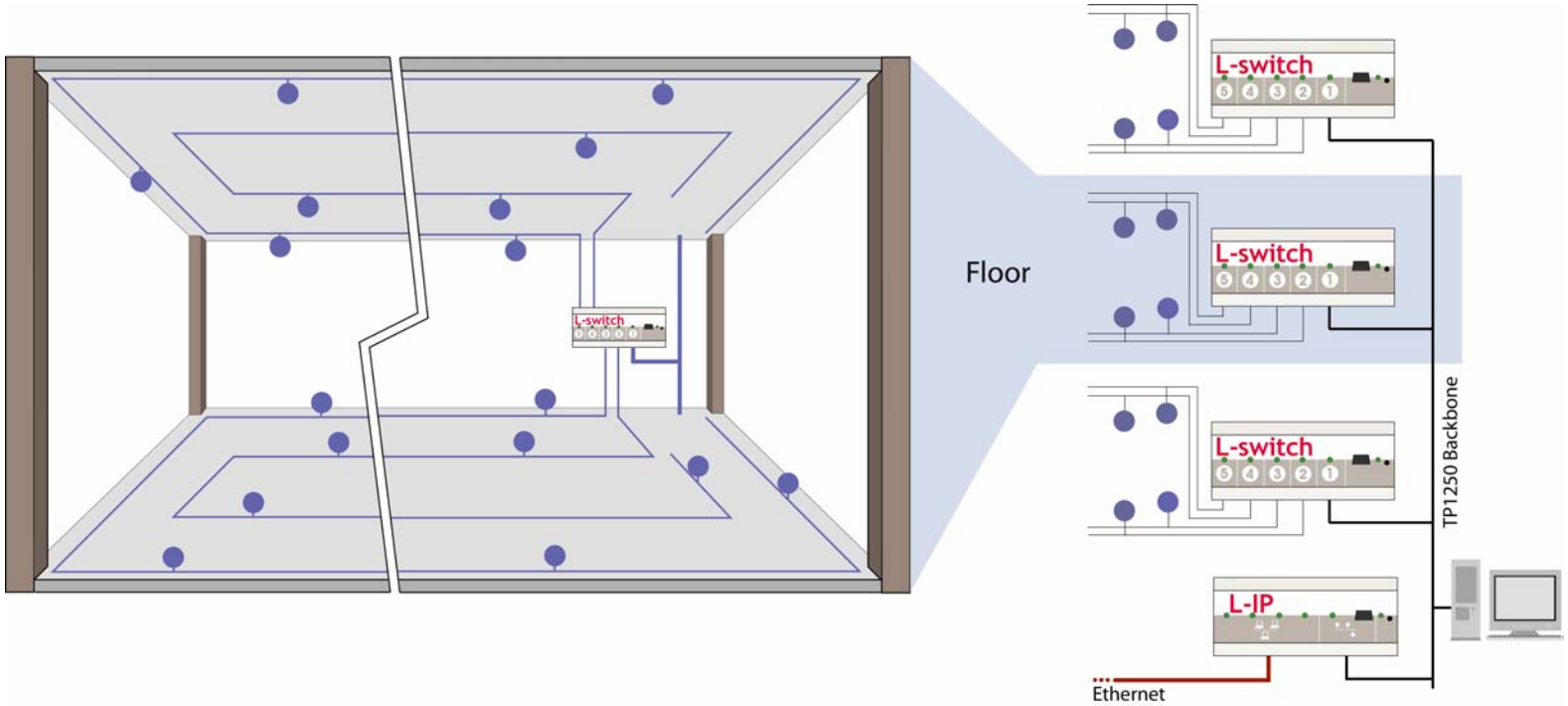

networks under control

L-Switch

LOYTEC electronics GmbH

Packet switching between EIA709 channels

Up to 5 network ports

Status LED for each channel

Plug & Play installation

Built-in network management and diagnostics

Subnet/Node and group address learning

No limitation of network input buffers

Based on LOYTECs ORION Stack

DIN rail mountable

9-24 VAC supply voltage

L-Switch Backbone Mode

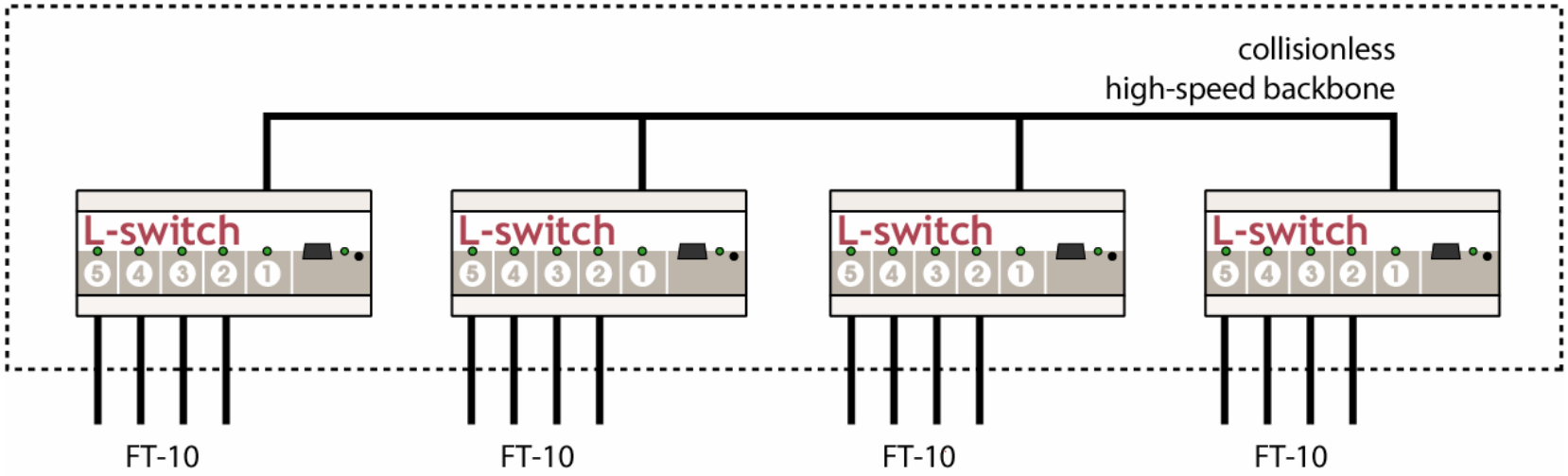

networks under control

L-Switch/R – Fault Tolerant

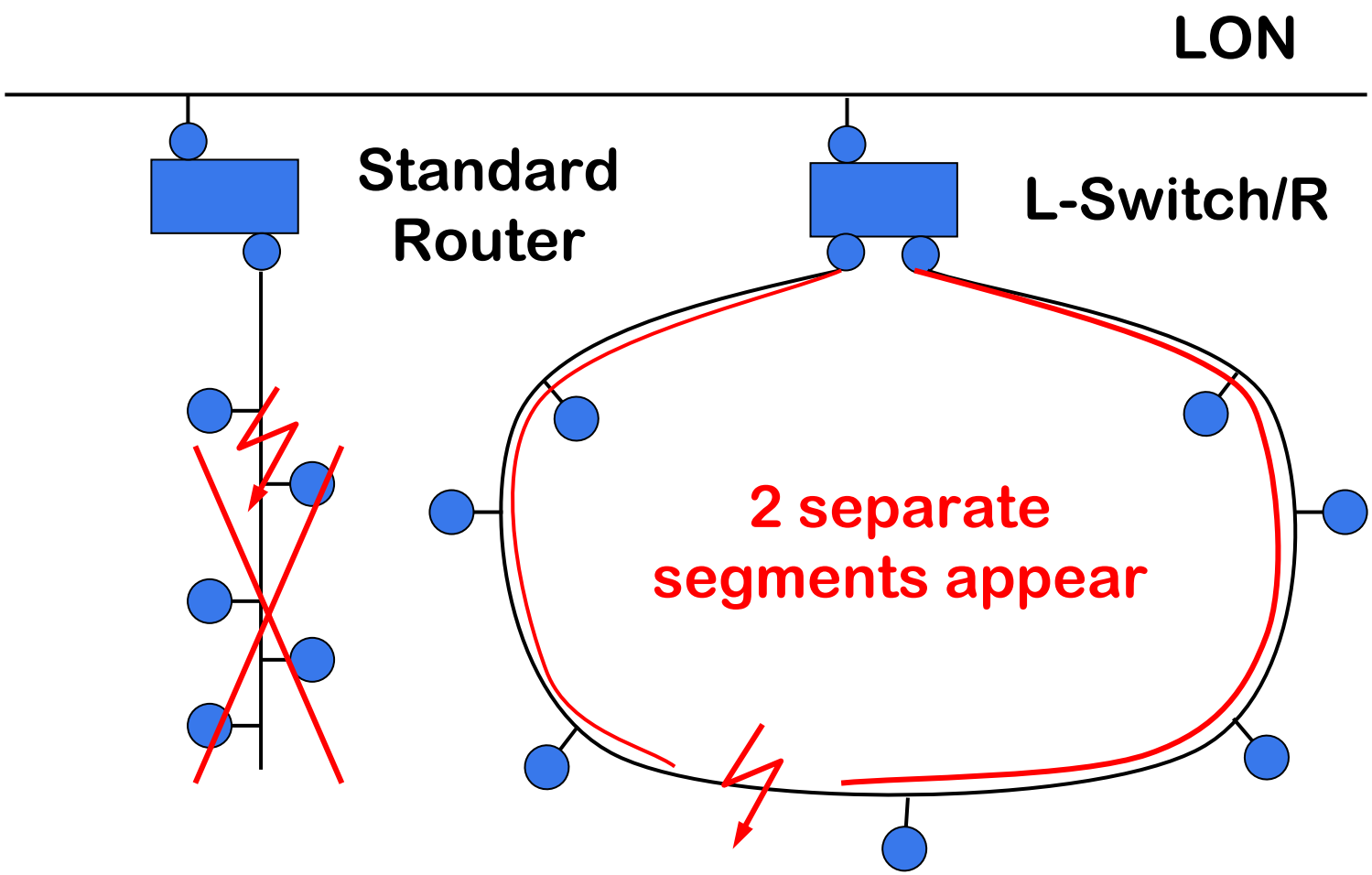

networks under control

L-Switch Configuration

LOYTEC electronics GmbH

- 2 FT-10 Ports (LS-33000C)
- 3 FT-10 Ports (LS-33300C)
- 2 FT-10 Ports / 1 TP-1250 Port (LS-13300C)
- 4 FT-10 Ports / 1 TP-1250 Port (LS-13333C)
- 3 FT-10 Ports / 2 TP-1250 Ports (LS-11333C)
- Other transceiver configurations on request (RS485, powerline,...)
- Optional collisionless backbone mode with up to 8 L-Switch devices
- Packet processing time ca. 350µs/packet
- 9-35 V DC / 9-24V AC supply voltage
- 4 Watt power consumption

networks under control

L-IP

NEW!

LOYTEC electronics GmbH

Built-in configuration server

Status LEDs

Easy Installation

Packet routing between IP and EIA709 networks

Configured Router

Subnet/Node and Group address learning

Built-in Network Management and Diagnostics

No limitation of network input buffers

Based on LOYTECs ORION Stack

DIN rail mountable

9-24 VAC supply voltage

networks under control

L-IP

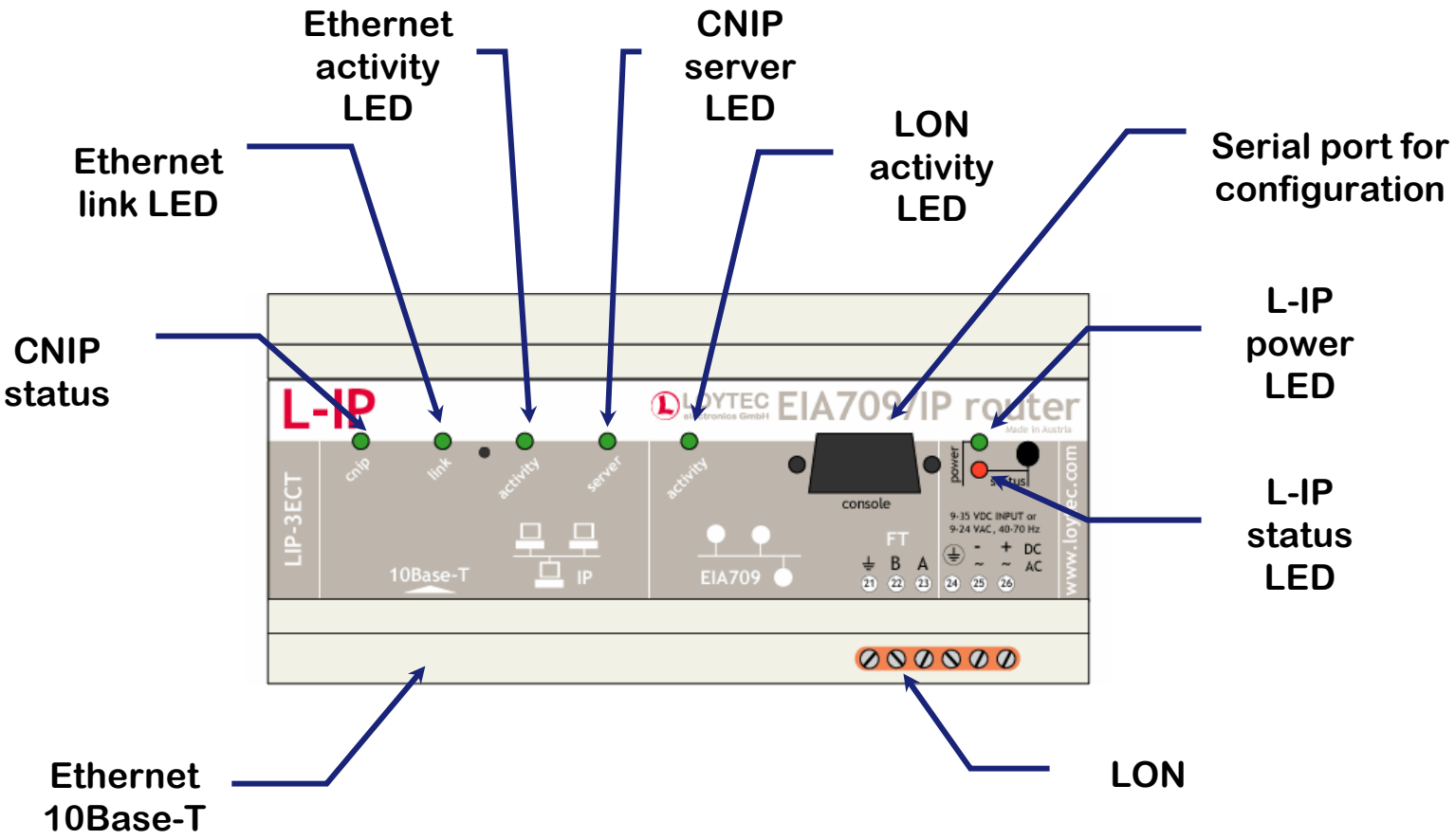

networks under control

Easy to use

LOYTEC electronics GmbH

- **Installation**
  - IP address
    - DHCP
    - manual
  - Set the configuration server IP address
  - Easy configuration by using a terminal program
- **Plug‘n‘Play functionality when using L-Switches**
- **Remote Protocol Analyzer Function**
- **Supports standard configured router capabilities**
- **Can be used behind firewalls**
- **Integrated Configuration Server**
- **Supports MD-5 authentication**

networks under control

Typical Application

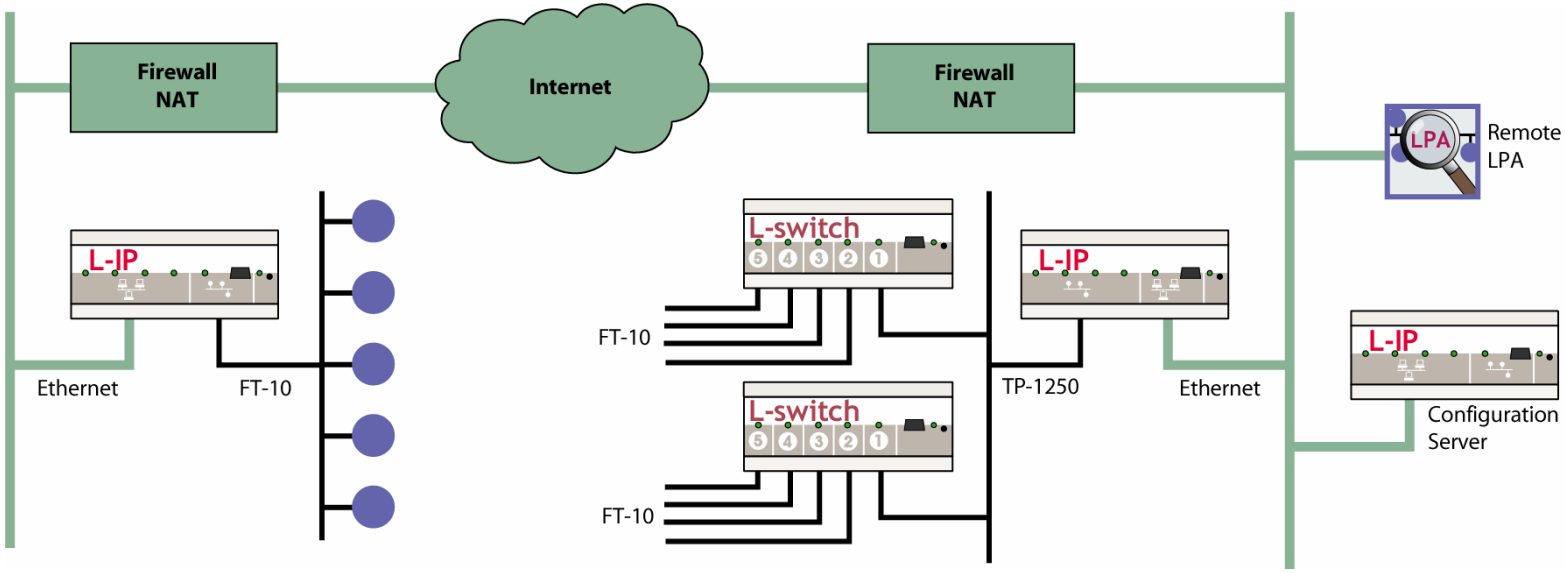

networks under control

L-IP Configuration

LOYTEC electronics GmbH

- 1 FT-10 Port / 1 Ethernet Port (LIP-3ECT)
- 1 TP-1250 Port / 1 Ethernet Port (LIP-1ECT)
- Other transceiver configurations on request (RS485, powerline,...)
- Tunneling router between LonWorks and IP
- Built-in configuration server
- Real-time clock with battery backup
- 9-35 VDC / 9-24VAC supply voltage
- 4 Watt power consumption
- Remote firmware and configuration download
- DIN rail mountable

ANSI/EIA-852

LOYTEC electronics GmbH

- Use Ethernet/IP as a LonWorks channel
- Use standard tools to configure ALL LonWorks nodes in the system
- Same application can be used to communicate either over IP or native over EIA-709 media
- Available for embedded platforms and PCs (Linux and Windows)
- All ORIONStack features are supported for IP channels and EIA-709 channels

networks under control

IP-Node System Architecture

LOYTEC electronics GmbH

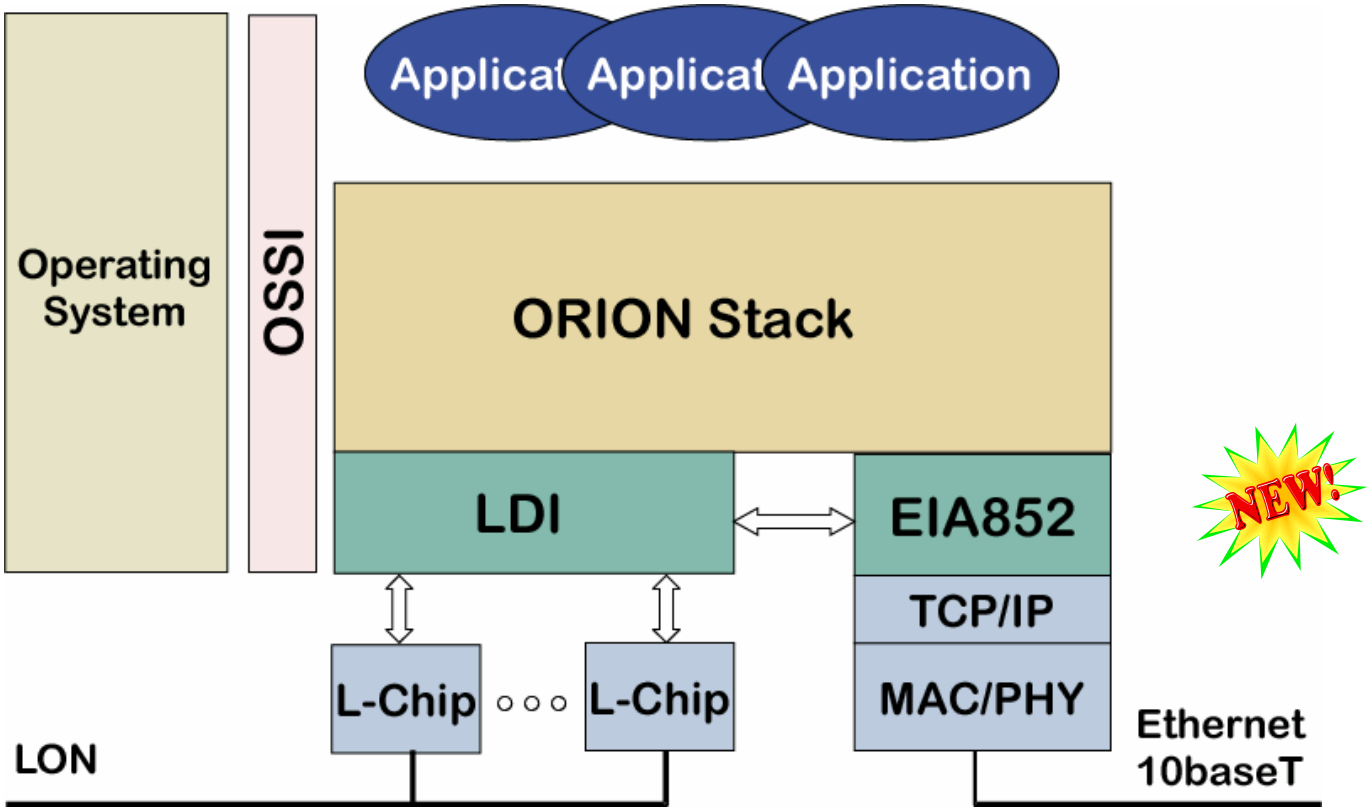

networks under control

EIA-852 and LonMark

LOYTEC electronics GmbH

- **Included as IP-852 channel in Interoperability Guidelines 3.3**
- **Basis for interoperable nodes on IP channels**
- **IP-852 is a standard channel**
  - open for custom IP based nodes
  - reuse of existing LonMark profiles
- **Products supporting IP-852 are „LonMark“ able**

networks under control

Existing Solutions for IP-852

LOYTEC electronics GmbH

- **Echelon Products**
  - LNS supporting VNI
  - i.Lon 1000
- **LOYTEC Products**
  - L-IP EIA-709/Ethernet router
  - L-Core 2.0 with L-CNIP library
  - L-CNIP for Win32 and Linux
- **Adept**
  - Gadget Gateway
- ...

networks under control

LOYTECs IP-852 Solution

LOYTEC electronics GmbH

- L-Core 2.0 platform supporting EIA-709 (FT-10, TP-1250, PL-22, ...) and IP-852 (Ethernet) channels
- Win32 (Win98 to WinXP) DLL to be used with ORION-LIB
- Linux Kernel 2.4 Library for ORION-LIB
- Source code of L-CNIP and ORION Stack available
- Truly open solution

networks under control

High-Performance Controller Node

LOYTEC electronics GmbH

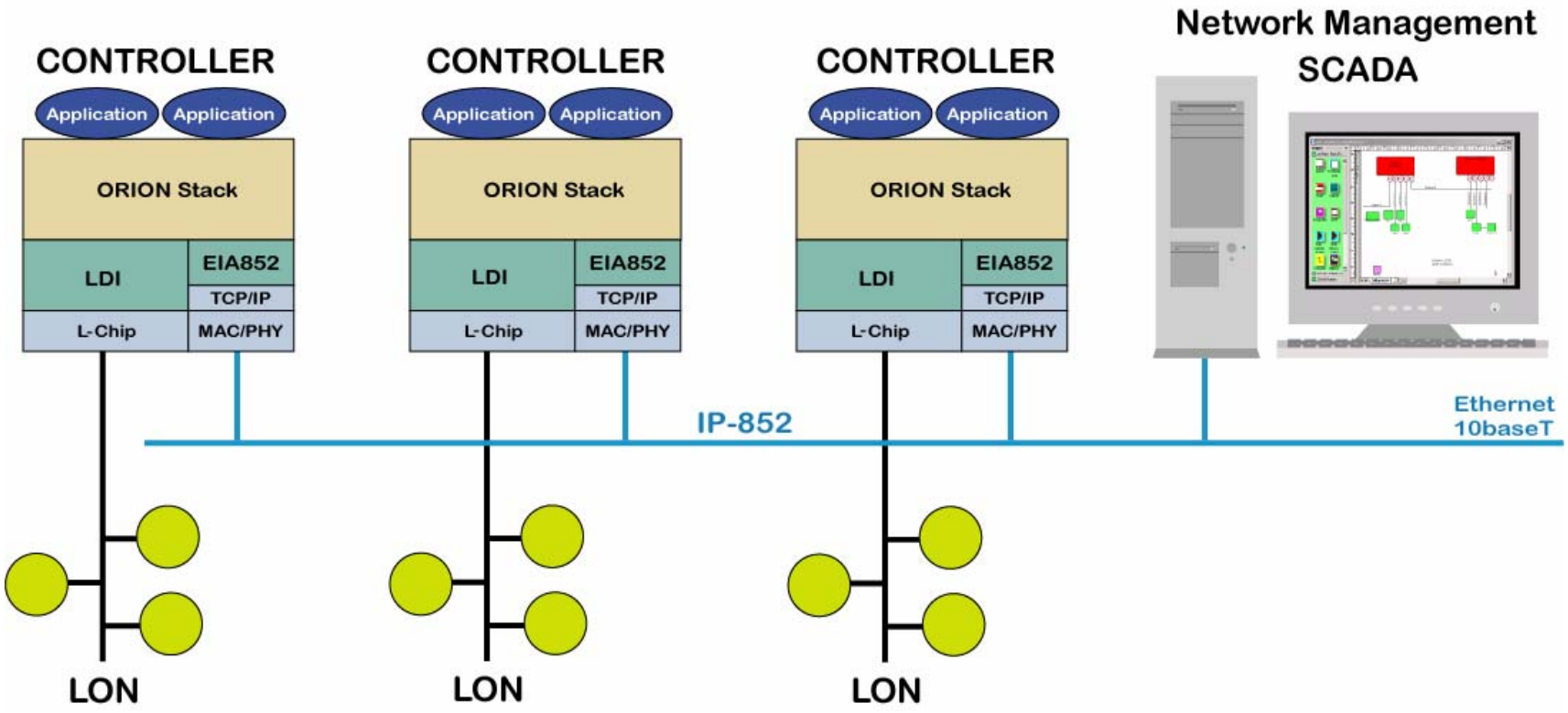

networks under control

Gateways

networks under control

L-Proxy

LOYTEC electronics GmbH

Binding of network variables across domain boundaries

Up to 5 network ports (5 x 2 domains)

Status LED for each channel

LNS plug-in for configuration

Supports 256 NVs and 384 Alias NVs per port

Remote firmware and configuration update

Supports 256 address table entries per port

Conversion between different SNVT types

9-24 VAC supply voltage

Dynamic NVs

Real-Time clock object

DIN rail mountable

L-Proxy Application Examples

LOYTEC electronics GmbH

- Transparent communication between different subsystems in multiple LNS databases
- Separation of responsibilities between different subsystems (definition of well defined interfaces)
- Binding across domain boundaries
- Expansion of maximum address table entries for a Neuron Chip
- Add Alias NVs to Neuron Chip Nodes
- Increase the maximum number of groups in a network (> 256)
- SNVT conversion
- Firewall for EIA-709 networks

networks under control

L-Proxy as a LON-LON Gateway

LOYTEC electronics GmbH

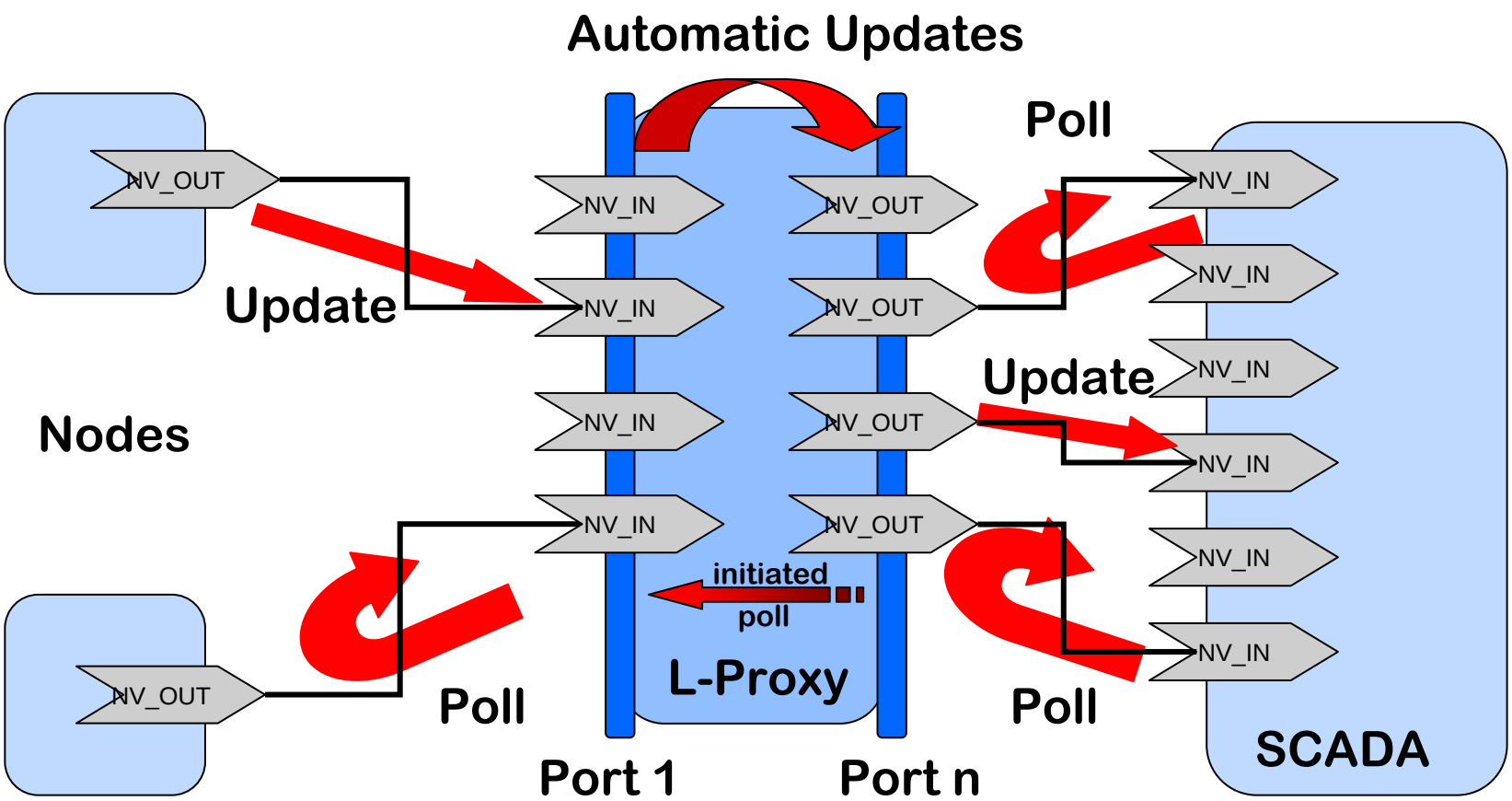

networks under control

L-Proxy Configuration

LOYTEC electronics GmbH

- 4 FT-10 Ports / 1 TP-1250 Port (LP-13333C)
- Other transceiver configurations on request (RS485, powerline,...)
- Gateway on network variable layer
- Configuration with LNS plug-in or stand-alone configuration tool
- Real-time clock with battery backup
- 9-35 VDC / 9-24VAC supply voltage
- 4 Watt power consumption
- Remote firmware and configuration download
- DIN rail mountable

networks under control

L-Gate

LOYTEC electronics GmbH

10Base-T Ethernet Interface

Serial RS-232 interface

ANSI/EIA-709 interface

LonMaker plug-in for configuration

Scriptable gateway programming

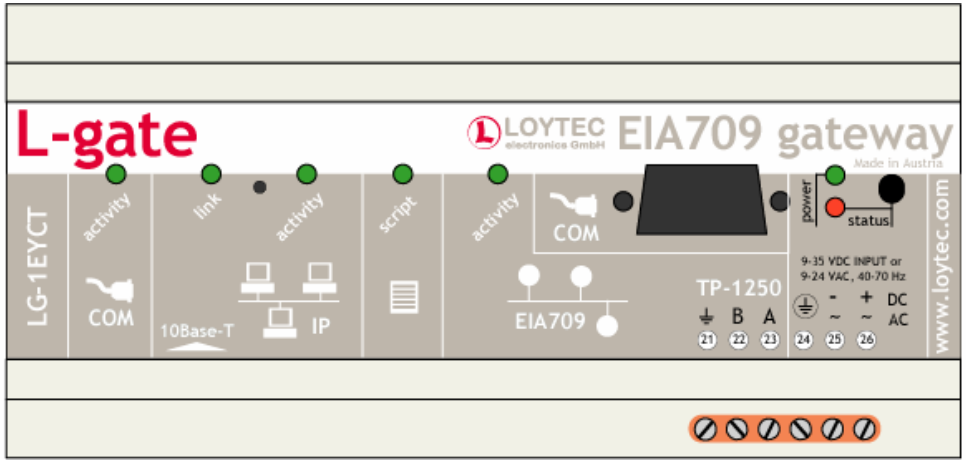

Remote firmware and configuration update

Web server

Based on LOYTECs ORION Stack

Email client

Real-Time clock object

DIN rail mountable

9-24 VAC supply voltage

Gateway Architecture

LOYTEC electronics GmbH

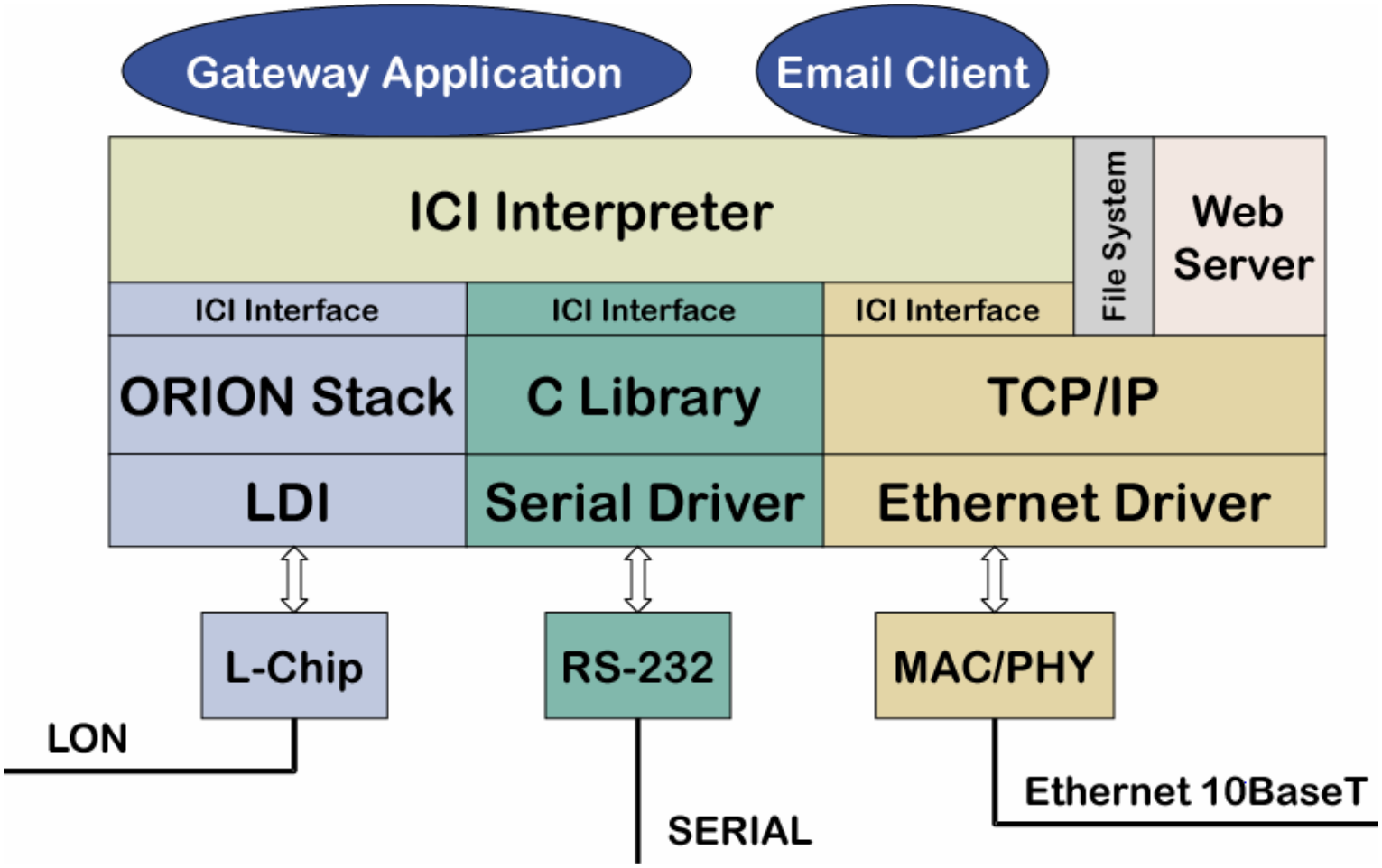

networks under control

L-Gate: Application Example

LOYTEC electronics GmbH

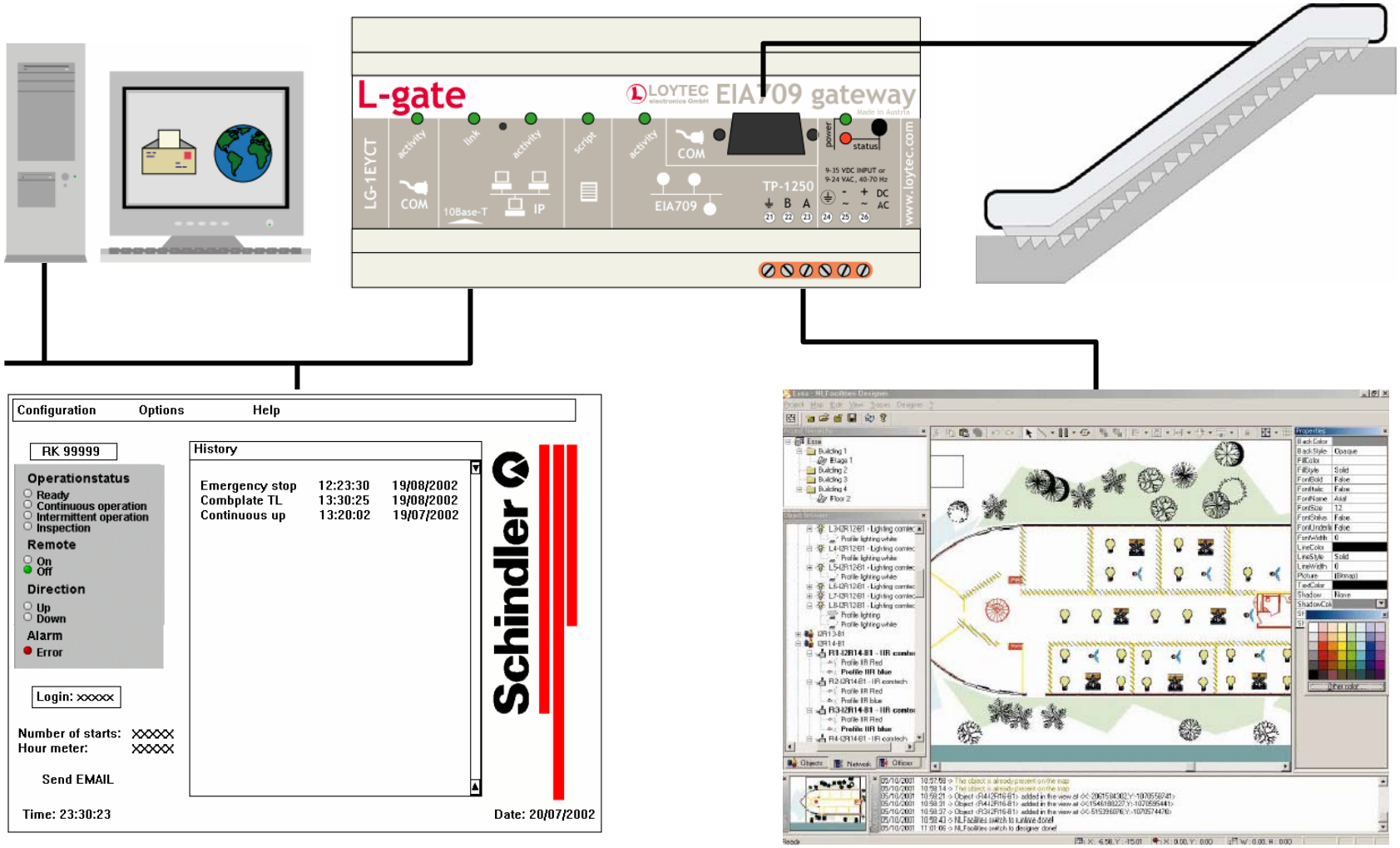

networks under control

System Diagnostics Tools

networks under control

LPA – Protocol Analyzer

LOYTEC electronics GmbH

- Records and displays all packets on the network
- Software selectable transceivers: FT-10, TP-1250, RS-485, PLT-22
- Shows detailed statistics information
- Symbolic names for nodes and NVs
- Sophisticated packet filters
- Plug-in and server API
- LPA-PP: printer port
- LPA-USB: USB 1.1 port
- Runs under all Windows versions

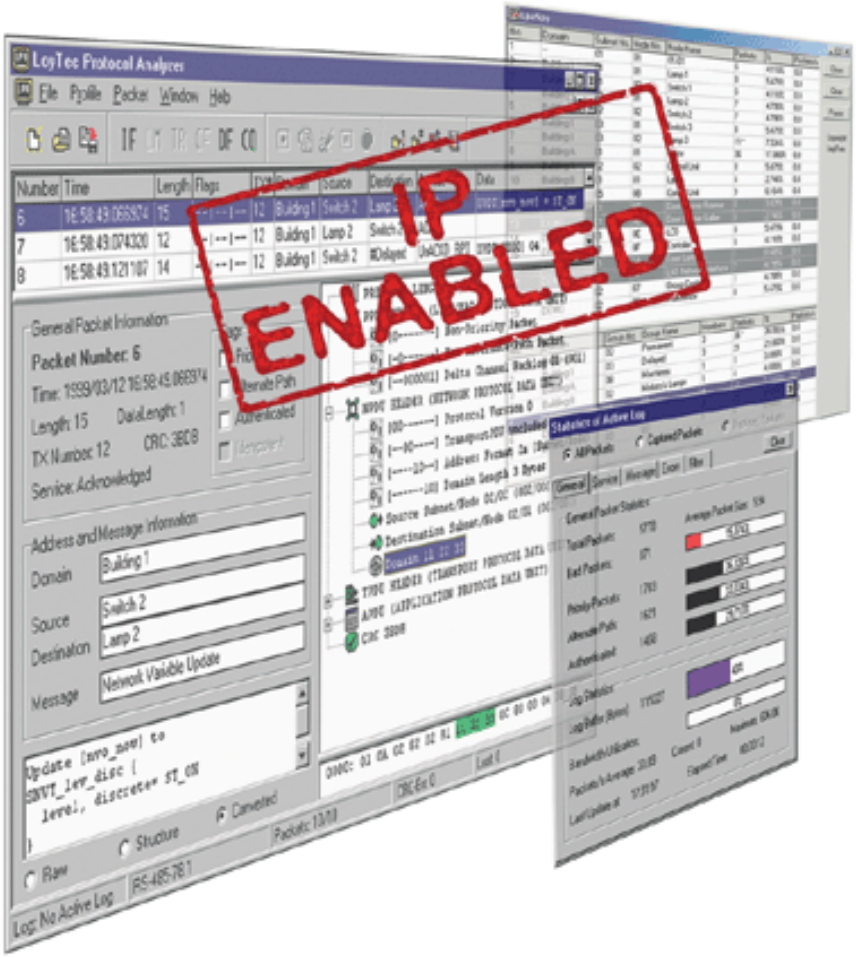

networks under control

LPA – Protocol Analyzer

LOYTEC electronics GmbH

LoyTec Protocol Analyzer

File Profile Packet Window Help

Number	Time	Length	Flags	TX#	Domain	Source	Destination	Service	Data
6	16:58:49.066974	15	--|--|--	12	Building 1	Switch 2	Lamp 2	ACKD	UPDT[nvo_now] = ST_ON
7	16:58:49.074320	12	--|--|--	12	Building 1	Lamp 2	Switch 2	ACK	
8	16:58:49.121107	14	--|--|--	12	Building 1	Switch 2	#Delayed	UnACKD_RPT	UPDT[0000] 04

General Packet Information

Packet Number: 6

Time: 1999/03/12 16:58:49.066974

Length: 15 DataLength: 1

TX Number: 12 CRC: 3BDB

Service: Acknowledged

Flags: Priority, Alternate Path, Authenticated, Idempotent

Address and Message Information

Domain: Building 1

Source: Switch 2

Destination: Lamp 2

Message: Network Variable Update

```
Update [nvo_now] to
SNVT_lev_disc {
  level, discrete= ST_ON
}
```

Raw Structure Converted

```
PREAMBLE LENGTH: 20
PPDU HEADER (LINK/MAC PROTOCOL DATA UNIT)
  [0-------] Non-Priority Packet
  [-0------] Non-Alternate-Path Packet
  [--000001] Delta Channel Backlog 01 (001)
NPDU HEADER (NETWORK PROTOCOL DATA UNIT)
  [00------] Protocol Version 0
  [--00----] TransportPDU included
  [----10--] Address Format 2a (Subnet/Node)
  [------10] Domain Length 3 Bytes
  Source Subnet/Node 02/02 (002/002)
  Destination Subnet/Node 02/01 (002/001)
  Domain 11 22 33
TPDU HEADER (TRANSPORT PROTOCOL DATA UNIT)
APDU (APPLICATION PROTOCOL DATA UNIT)
CRC 3BDB
```

```
0000: 01 0A 02 82 02 81 11 22 33 0C 80 03 04 DB 3B
```

Log: No Active Log | RS-485-78.1 | Packets: 10/10 | CRC-Err: 0 | Lost: 0

Statistics of Active Log

All Packets | Captured Packets | Displayed Packets

General | Service | Message | Errors | Filter | Clear

General Packet Statistics

Total Packets:	5778	Average Packet Size:	9,94
Bad Packets:	871		15,074%
Priority Packets:	1783		36,336%
Alternate Path:	1621		33,034%
Authenticated:	1458		29,713%

Log Statistics

Log Buffer [Bytes]:	115227	43%
Bandwidth Utilization:		0%

Packets/s Average: 30,09 Current: 0 Maximum: 606,06

Last Update at: 17:31:57 Elapsed Time: 00:03:12

networks under control

LPA – IP

NEW!

LOYTEC electronics GmbH

- Monitor packets on IP Channel
- Monitor network traffic behind L-IPs from remote
- Record multiple LPA log files in parallel

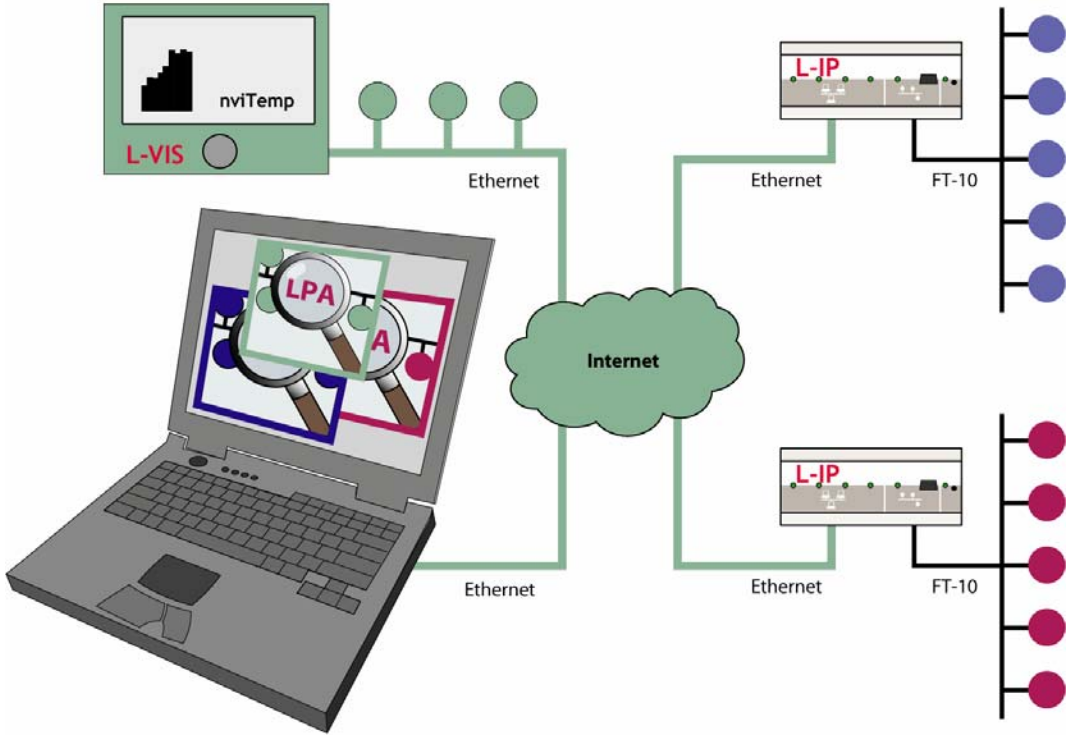

networks under control

LPA – Spy

LOYTEC electronics GmbH

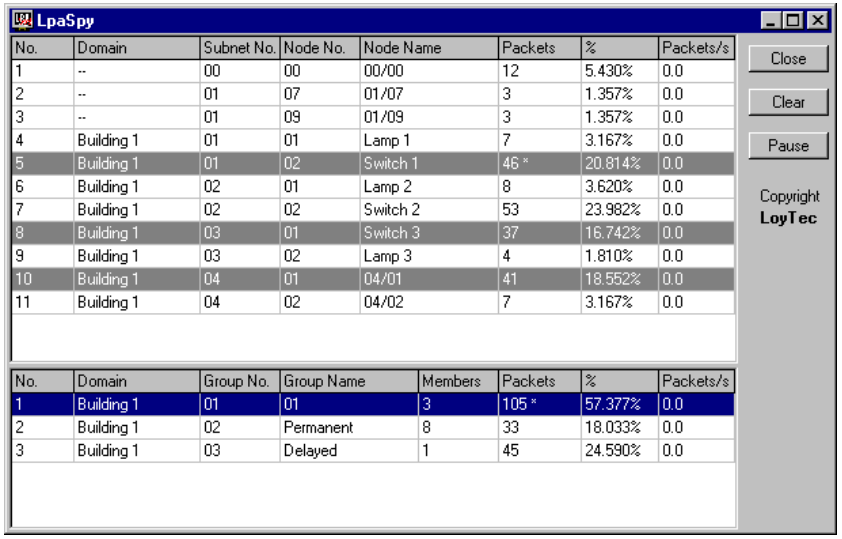

No.	Domain	Subnet No.	Node No.	Node Name	Packets	%	Packets/s
1	--	00	00	00/00	12	5.430%	0.0
2	--	01	07	01/07	3	1.357%	0.0
3	--	01	09	01/09	3	1.357%	0.0
4	Building 1	01	01	Lamp 1	7	3.167%	0.0
5	Building 1	01	02	Switch 1	46 *	20.814%	0.0
6	Building 1	02	01	Lamp 2	8	3.620%	0.0
7	Building 1	02	02	Switch 2	53	23.982%	0.0
8	Building 1	03	01	Switch 3	37	16.742%	0.0
9	Building 1	03	02	Lamp 3	4	1.810%	0.0
10	Building 1	04	01	04/01	41	18.552%	0.0
11	Building 1	04	02	04/02	7	3.167%	0.0

No.	Domain	Group No.	Group Name	Members	Packets	%	Packets/s
1	Building 1	01	01	3	105 *	57.377%	0.0
2	Building 1	02	Permanent	8	33	18.033%	0.0
3	Building 1	03	Delayed	1	45	24.590%	0.0

- Client application for LPA
- Reconstructs networks from captured packets
- On-line display of detected nodes
- Shows node activity statistics
- Overview of complex and unknown networks
- Shows node tree sorted by domain/subnet/node
- Detects "dead nodes" and nodes that are monopolizing the network

LSD Tool – System Diagnostics Tool

LOYTEC electronics GmbH

- Network diagnostics and L-Switch/L-IP management tool
- Monitoring of bandwidth utilization and CRC errors
- Display L-Switch/L-IP statistics information (received packets, transmitted packets, etc.)
- L-Switch/L-IP firmware upgrade
- Port management of L-Switch
- Life list; monitor voltage/temp.
- Firmware download
- Requires a NIC709-xx interface
- Runs on all Windows versions

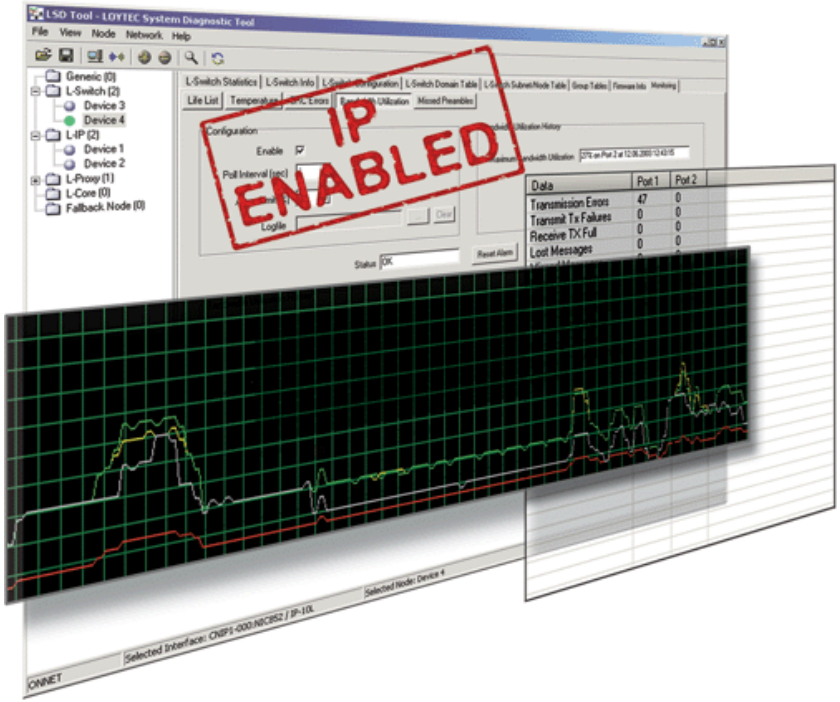

networks under control

LSD Tool – System Diagnostics Tool

LOYTEC electronics GmbH

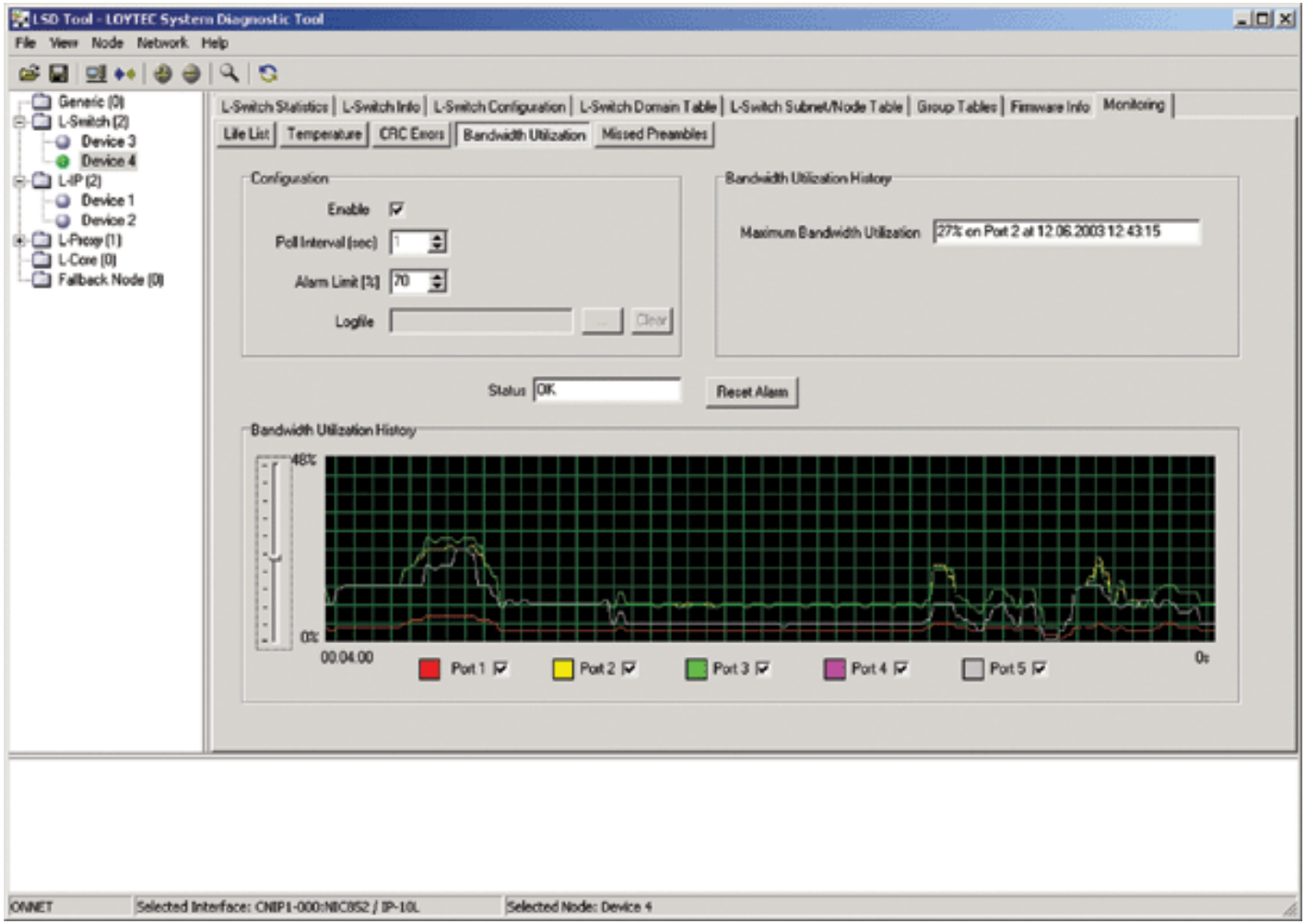

networks under control

Network Setup

LOYTEC electronics GmbH

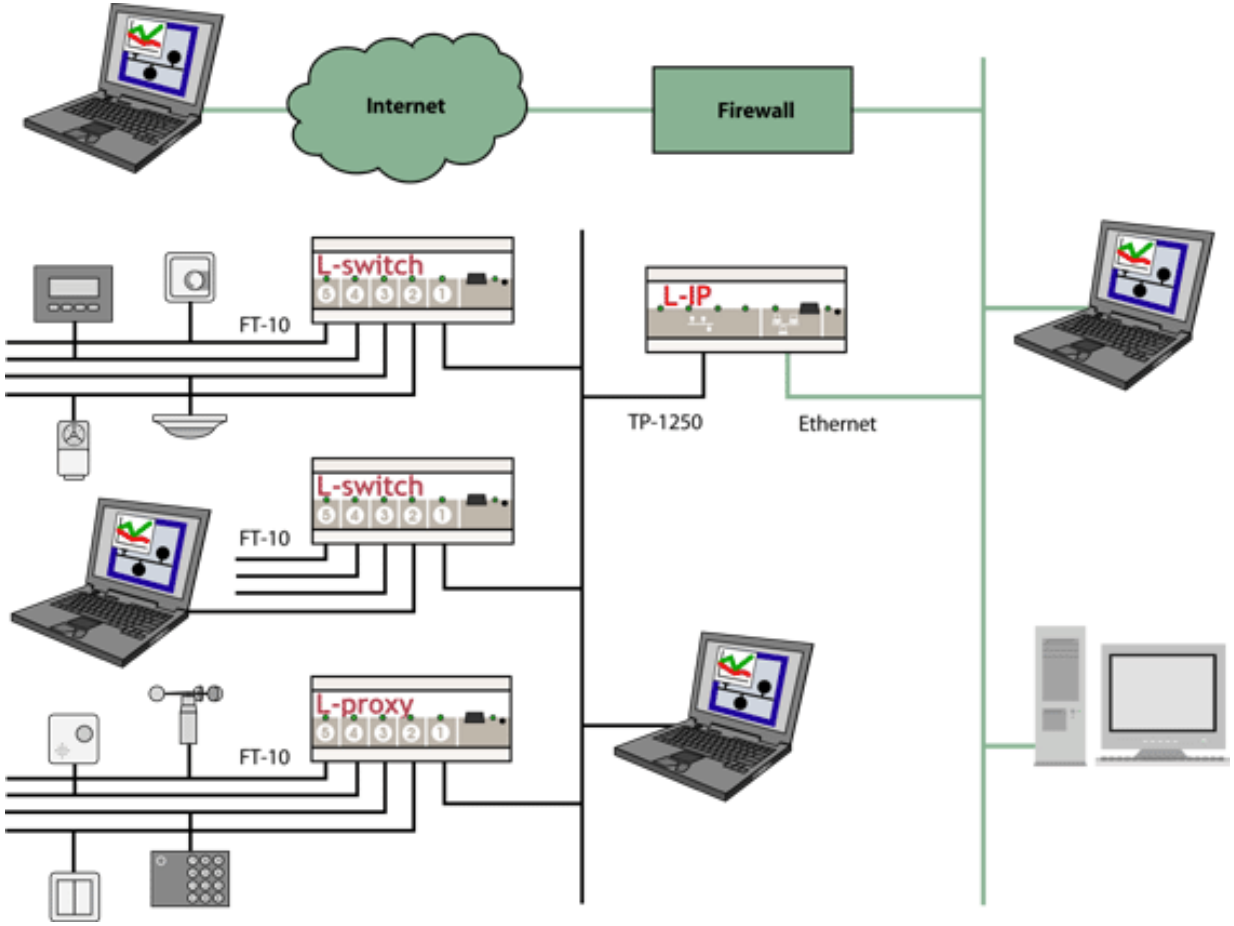

networks under control

Embedded Controllers

L-CORE

LOYTEC electronics GmbH

- Compact size high-performance EIA-709 network node
- ARM7 CPU @ 33 MHz (Samsung S3C3400X)
- 1 or 2 MBytes FLASH, 2 MBytes DRAM
- L-Chip™ based network interface (LC7093-64)
- 8 channel ADC, Serial interface, 34 user programmable I/Os
- JTAG interface for debugging
- RTEMS real-time multitasking OS (incl. TCP/IP stack)
- ORION protocol stack for high-speed EIA-709 connectivity

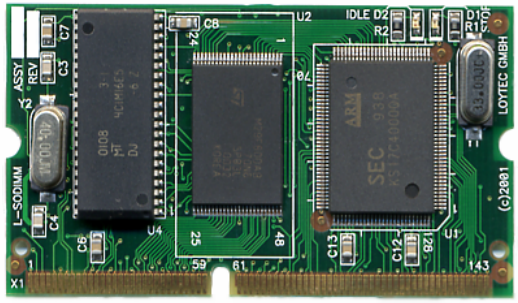

networks under control

L-CORE-MOD Architecture

LOYTEC electronics GmbH

L-CORE Module

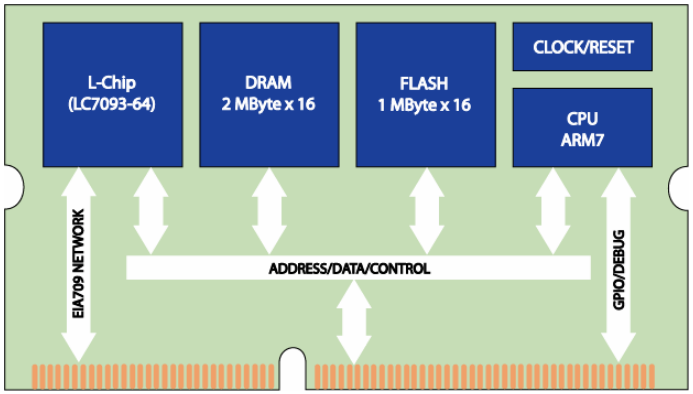

L-CORE based Product

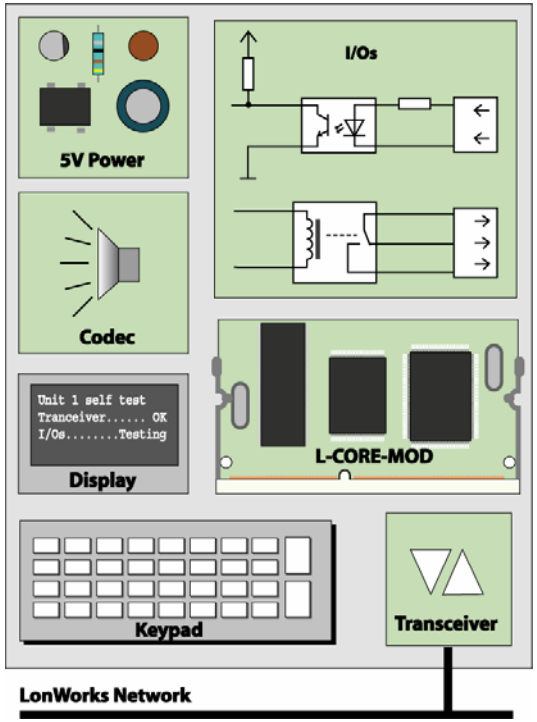

networks under control

L-CORE-MOD Software

LOYTEC electronics GmbH

- **Open Source Development Environment**
  - GNU Tools (GNU)
  - RTEMS 4.0.0 (OAR)
    - Open-Source Real-Time OS
    - TCP/IP Stack
  - Host systems: Windows NT/2000 oder Linux
- **Hardware Support Library**
  - Flash interface
  - CPU Support (Interrupts, ...)
  - I/O functions (ADC, I^2C, ...)
  - Watchdog Timer

networks under control

L-CORE Application Areas

LOYTEC electronics GmbH

Gateways
(IP, Phone, ...)

Data
Logging

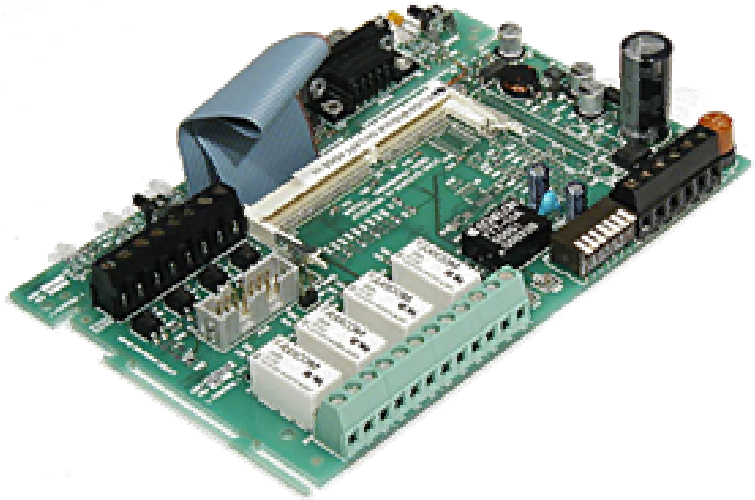

Network
Monitoring

Network
Intensive
Applications

High
Performance
Controllers

Routers &
Tunneling

networks under control

L-CORE Products & Services

LOYTEC electronics GmbH

PRODUCTS

L-CORE-MOD	Module containing CPU and L-Chip
L-CORE-KIT	Complete development kit Enables custom designs
L-CORE-LIC	Run-time licenses for custom designs
L-CNIP	CNIP Library for IP-852 designs

SERVICES

- TRAIN3 — Training course
- DESIGN — Custom design support

networks under control

Technology Products

L-CHIP

LOYTEC electronics GmbH

- Communication co-processor
- 5 V operation, 25 mA@20MHz
- Bit-rates between 150 bps and 5 Mbps
- Various transceiver modes
- Internal 2 KByte transmit and receive buffers
- Programmable address filtering

- Supports all possible 256 groups per domain in EIA-709 applications
- Sophisticated interrupt handling
- Unique 48 bit Node ID
- Processes time critical protocol tasks

LC-Wizard

LOYTEC electronics GmbH

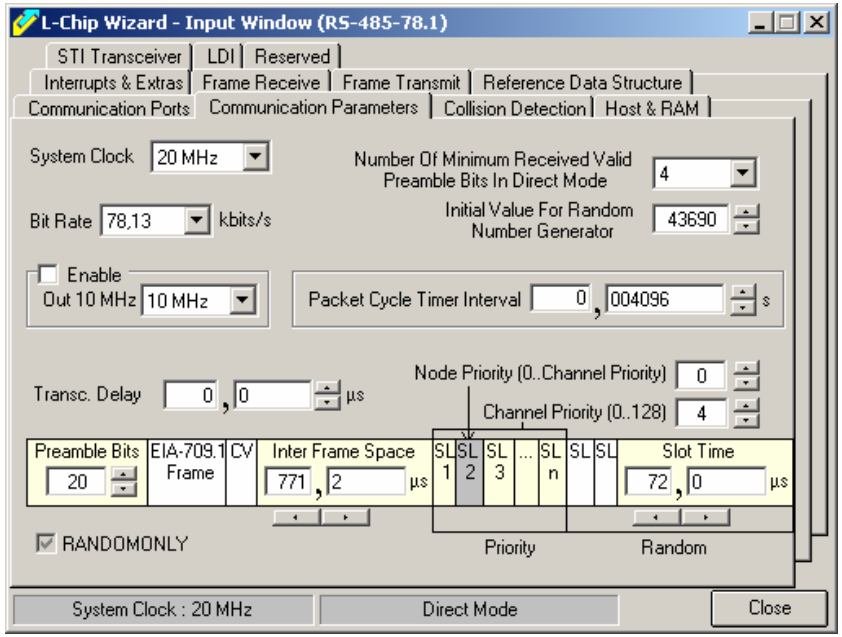

- Software tool to configure the L-Chip
- Converts real-life data into register values for the L-Chip
- Resolve register dependencies
- User-friendly graphical interface
- Runs on all Windows® Versions

networks under control

LV

- L-Chip core HDL source code
- Unencrypted VHDL source code
- Clean modular design
- Technology independent (FPGA, ASIC, ..)
- Input clock 10/20/40/80 MHz
- Only 29k synthesizable gates
- Comprehensive test bench

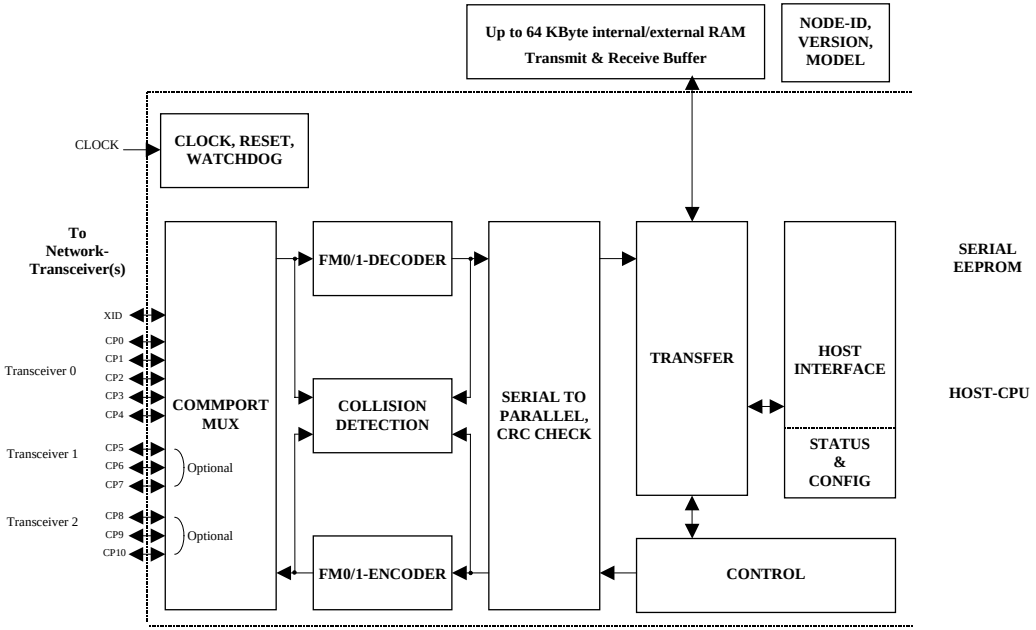

networks under control

ORION Stack

LOYTEC electronics GmbH

- ANSI/EIA-709.1-B and ENV 13154-2 Annex D (normative) LonTalk
- Written in ANSI C
- Source code available
- Highly scaleable
- Mulitple hardware platforms

- Supports multiple transaction spaces
- Up to 65536 address table entries
- Supports multiple applications, dynamic NVs

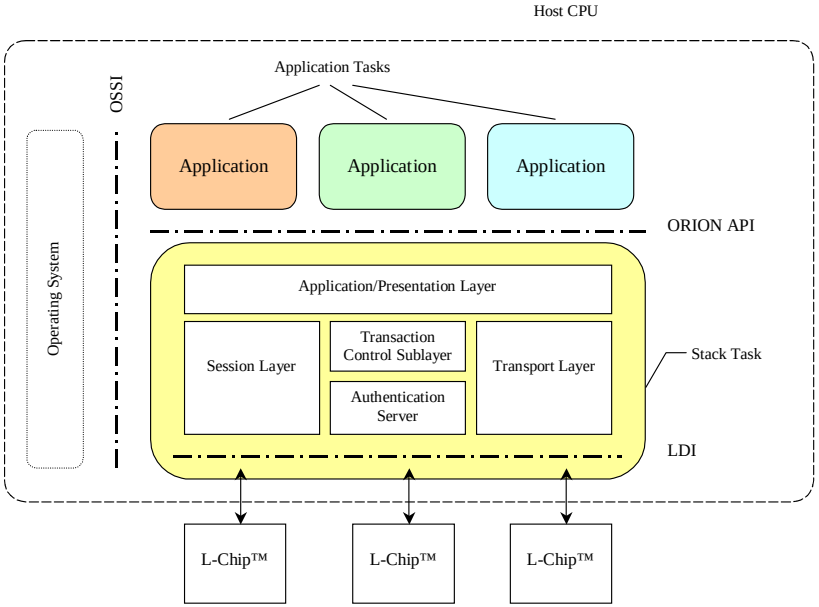

networks under control

LC-SIM

LOYTEC electronics GmbH

- Portable C++ L-Chip (LC7093) Simulation Model
- Simulates all major L-Chip functions
- Operates on register access level
- Transparent to applications running on L-Chips
- Can run ORION Protocol Stack on top
- Entire networks with multiple channels and segments can be simulated
- Network applications can be tested without hardware

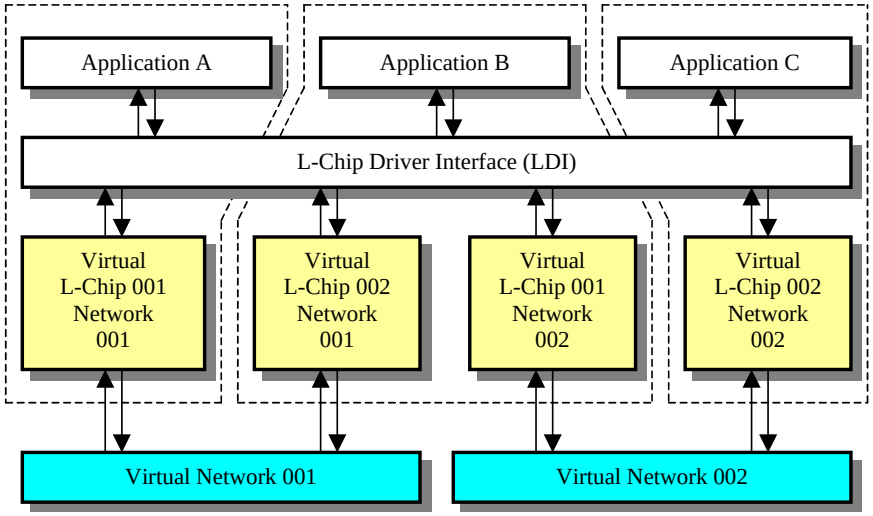

networks under control

VENUS

LOYTEC electronics GmbH

- Vienna Embedded Networking Utility Suite
- Platform independent
- OS independent
- Sophisticated debugging tools available
- Programmable with standard C compiler
- No dedicated design tools required
- Interfaces to any CPU and micro-controller

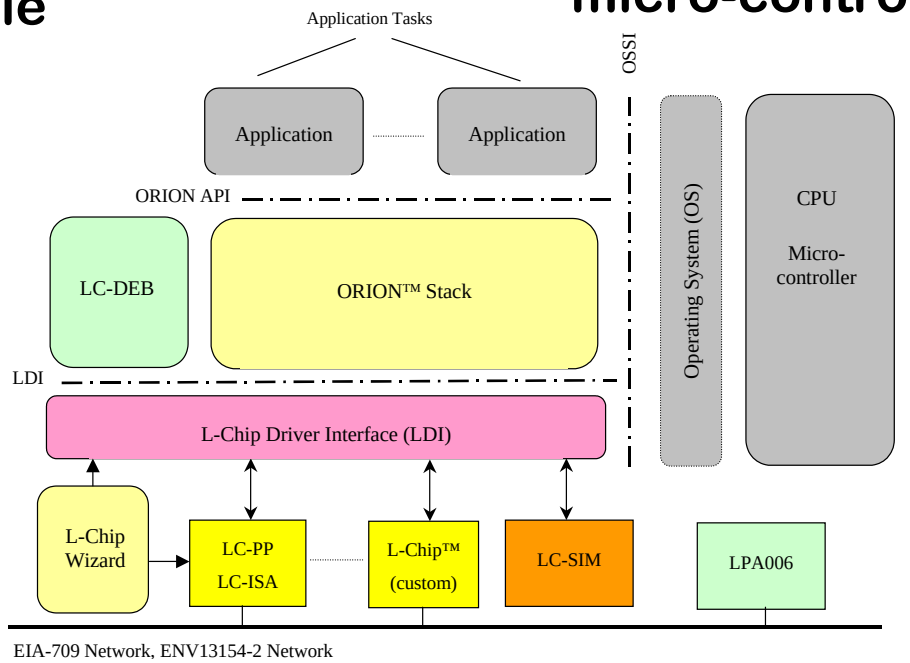

networks under control

Professional Services

Design Services

LOYTEC electronics GmbH

- Hardware design support
- ORION Stack porting to other OS, uP, ...
- L-CORE design-in support
- Custom node/application designs
- Network trouble shooting
- Network infrastructure design

networks under control

Training Classes

LOYTEC electronics GmbH

- LonWorks training for LNO
- LPA training
- In-house training
- L-CORE training

networks under control

Trainingsprogramm

LOYTEC electronics GmbH

Eigene Kurse:

- L-Core Training
- Systemintegration in LonWorks Netzwerken
- Expertentraining für LonWorks Netzwerke

OEM Kurse:

- TAC Netzwerktraining
- LNO Schulung

networks under control

L-Core Training

LOYTEC electronics GmbH

Zielgruppe: **Entwickler, die auf Basis der L-Core Technologie Produkte entwicklen wollen**

Dauer: 2 Tage

Vortragender: Thomas Rauscher

Inhalt:

- Tag 1
  - Die L-Core Entwicklungsumbebung
  - Erarbeiten eines Programms für den ORION Stack (1)
- Tag 2
  - Erarbeiten eines Programms für den ORION Stack (2)
  - Beschreibung der L-Core Hardware

networks under control

Planung und Integration von LonWorks Netzwerken

LOYTEC electronics GmbH

Zielgruppe: **Techniker, die als Integratoren in die LonWorks Technologie einsteigen wollen**

Dauer: 3 Tage

Vortragender: Norbert Reiter, Dietmar Loy

Inhalt:

- Tag 1:
  - Überblick über Begriffe und Konzepte der LON Technologie
- Tag 2:
  - Integration eines Einzelraumes am Labormodell mit LonMaker
  - Planung von LonWorks Netzwerken (Netzaufbau, Komponentenauswahl)
  - Integration eines Projektes mit NL220
- Tag 3:
  - Entwerfen eines Großprojektes anhand von Herstellerkatalogen und XIF-Files
  - Praktische Tipps zur Problemvermeidung

networks under control

Problemvermeidung und Fehlersuche in LonWorks Netzwerken

LOYTEC electronics GmbH

Zielgruppe: **Integratoren mit LonWorks Erfahrung, die große Netzwerke planen und Fehler effizient finden möchten.**

Dauer: 2 Tage

Vortragender: Norbert Reiter, Dietmar Loy

Inhalt:

- Tag 1:
  - Richtige Planung großer LonWorks Netzwerke
  - Praktische Übungen mit L-Switch, L-IP und L-Proxy am Labormodell
- Tag 2:
  - Beschreibung des LonTalk Protokolls
  - Arbeiten mit dem LPA
  - Erarbeiten typischer Fehlerursachen
  - Finden und beheben der Probleme mit dem LPA

networks under control

Further information

LOYTEC electronics GmbH

E-Mail: info@loytec.com

Webpage: http://www.loytec.com

ORIONStack, L-Switch, L-IP, L-Proxy, L-CORE, L-Chip are trademarks of LOYTEC electronics GmbH. Other trademarks and trade names used in this document refer either to the entities claiming the markets and names, or to their products. LOYTEC disclaims proprietary interest in the markets and names of others.

networks under control