USACERL Technical Report M-92/02
December 1991

US Army Corps
of Engineers
Construction Engineering
Research Laboratory

Effects of Leak Detection/Location on Underground Heat Distribution System (UHDS) Life Cycle Costs: A Probabilistic Model

by
Kent A. Miller
James V. Carnahan
Ellen G. Segan

Army maintenance costs for underground heat distribution systems (UHDSs) were $51.4 million in fiscal year 1989 (FY89). Leak location, an important UHDS maintenance element, is accomplished by using leak location techniques in various sequences, depending on the type of heat distribution system. This report presents a model to estimate the probable costs of leak detection in both direct buried (DB) prefabricated conduit and concrete shallow trench (ST) heat distribution systems, given the inherent uncertainty of available detection techniques. Techniques discussed include visual inspection, random search, bisection search, infrared thermography, tracer gas, and acoustic emission.

The projected leak location/repair costs for each UHDS are calculated, and the effects of maintenance costs on operation costs as a result of these projections are discussed. Also discussed are the construction cost/maintenance cost tradeoffs that occur when comparing DB and ST life cycle costs.

Approved for public release; distribution is unlimited.

The contents of this report are not to be used for advertising, publication, or promotional purposes. Citation of trade names does not constitute an official indorsement or approval of the use of such commercial products. The findings of this report are not to be construed as an official Department of the Army position, unless so designated by other authorized documents.

DESTROY THIS REPORT WHEN IT IS NO LONGER NEEDED

DO NOT RETURN IT TO THE ORIGINATOR

REPORT DOCUMENTATION PAGE

Form Approved
OMB No. 0704-0188

Public reporting burden for this collection of information is estimated to average 1 hour per response, including the time for reviewing instructions, searching existing data sources, gathering and maintaining the data needed, and completing and reviewing the collection of information. Send comments regarding this burden estimate or any other aspect of this collection of information, including suggestions for reducing this burden, to Washington Headquarters Services, Directorate for information Operations and Reports, 1215 Jefferson Davis Highway, Suite 1204, Arlington, VA 22202-4302, and to the Office of Management and Budget, Paperwork Reduction Project (0704-0188), Washington, DC 20503.

1. AGENCY USE ONLY (Leave Blank)	2. REPORT DATE	3. REPORT TYPE AND DATES COVERED
	December 1991	Final

4. TITLE AND SUBTITLE

Effects of Leak Detection/Location on Underground Heat Distribution System (UHDS) Life Cycle Costs: A Probabilistic Model

5. FUNDING NUMBERS

4A162781AT45
BO-011

6. AUTHOR(S)

Kent A. Miller, James V. Carnahan, and Ellen G. Segan

7. PERFORMING ORGANIZATION NAME(S) AND ADDRESS(ES)

USACERL
PO Box 9005
Champaign, IL 61826-9005

8. PERFORMING ORGANIZATION REPORT NUMBER

USACERL TR M-92/02

9. SPONSORING/MONITORING AGENCY NAME(S) AND ADDRESS(ES)

HQUSACE
ATTN: CEMP-ET
20 Massachusetts Avenue NW
Washington, D.C. 20314-1000

10. SPONSORING/MONITORING AGENCY REPORT NUMBER

11. SUPPLEMENTARY NOTES

Copies are available from the National Technical Information Service, 5285 Port Royal Road, Springfield, VA 22161.

12a. DISTRIBUTION/AVAILABILITY STATEMENT

Approved for public release; distribution is unlimited.

12b. DISTRIBUTION CODE

13. ABSTRACT (Maximum 200 words)

Army maintenance costs for underground heat distribution systems (UHDSs) were $51.4 million in fiscal year 1989 (FY89). Leak location, an important UHDS maintenance element, is accomplished by using leak location techniques in various sequences, depending on the type of heat distribution system. This report presents a model to estimate the probable costs of leak detection in both direct buried (DB) prefabricated conduit and concrete shallow trench (ST) heat distribution systems, given the inherent uncertainty of available detection techniques. Techniques discussed include visual inspection, random search, bisection search, infrared thermography, tracer gas, and acoustic emission.

The projected leak location/repair costs for each UHDS are calculated, and the effects of maintenance costs on operation costs as a result of these projections are discussed. Also discussed are the construction cost/maintenance cost trade-offs that occur when comparing DB and ST life cycle costs.

14. SUBJECT TERMS

underground heat distribution system
life cycle costs

15. NUMBER OF PAGES

32

16. PRICE CODE

17. SECURITY CLASSIFICATION OF REPORT	18. SECURITY CLASSIFICATION OF THIS PAGE	19. SECURITY CLASSIFICATION OF ABSTRACT	20. LIMITATION OF ABSTRACT
Unclassified	Unclassified	Unclassified	SAR

FOREWORD

This work was performed for the Directorate of Military Programs, Headquarters, U.S. Army Corps of Engineers (HQUSACE) under Project 4A162781AT45, "Energy and Energy Conservation"; Work Unit BO-011, "Modernization of Existing Underground Heat Distribution Systems." The HQUSACE Technical Monitor was Dale Otterness, CEMP-ET.

The study was conducted by the Engineering and Materials Division (EM), U.S. Army Construction Engineering Research Laboratory (USACERL). Dr. Paul A. Howdyshell is Chief, EM. James V. Carnahan is an Assistant Professor in the College of Engineering, University of Illinois at Urbana-Champaign.

COL Daniel Waldo, Jr., is Commander and Director of USACERL, and Dr. L.R. Shaffer is Technical Director.

CONTENTS

		Page
	SF298	2
	FOREWORD	2
1	INTRODUCTION	5
	Background	
	Objectives	
	Approach	
	Mode of Technology Transfer	
2	GENERAL CONFIGURATION OF UNDERGROUND HEAT DISTRIBUTION SYSTEMS	7
3	LEAK LOCATION METHODS FOR UNDERGROUND HEAT DISTRIBUTION SYSTEMS	9
	Visual Detection	
	Random Search	
	Sequential Search	
	Infrared Thermography	
	Tracer Gas	
	Acoustic Emission	
4	LIFE CYCLE COST COMPONENTS OF UNDERGROUND HEAT DISTRIBUTION SYSTEMS	12
	Capital/Construction Costs	
	Operating Costs	
	Maintenance Costs	
5	LEAK LOCATION MODEL	14
	Cost Of Leak Location For Shallow Trench Systems	
	Cost Of Leak Location For Direct Buried Systems	
6	PARAMETRIC STUDY OF EXPECTED COSTS	20
7	CONCLUSIONS	22
	NOTATION	22
	METRIC CONVERSION TABLE	23
	APPENDIX A: DERIVATION OF SEARCH LENGTH PROBABILITIES	24
	APPENDIX B: VALUES USED IN PARAMETRIC STUDY	28
	DISTRIBUTION	

EFFECTS OF LEAK DETECTION/LOCATION ON UNDERGROUND HEAT DISTRIBUTION SYSTEM (UHDS) LIFE CYCLE COSTS: A PROBABILISTIC MODEL

1 INTRODUCTION

Background

Concern about locating and repairing UHDS leaks is justified by the magnitude of the systems involved. In fiscal year 1989 (FY89), the Army cost for real property maintenance of steam and high-temperature hot water (HTHW) systems was $51.4 million.[1] According to a 1985 report, rebuilding all Department of Defense systems would cost about $9.5 billion.[2]

The problem of locating a UHDS leak, either steam or HTHW, has been a topic of investigation for some time. To reduce the guessing involved with leak detection/location, researchers recently developed a systematic approach to the problem that uses combinations of different leak detection methods.[3] These include infrared thermography, acoustic emission, tracer gas, and random search.

Interest in leak detection/location has been prompted by premature failures of UHDS, which decrease the useful lifetime of the systems. Possible reasons for premature failure are corrosion of the piping, deteriorated or missing insulation, improper conduit coating, and ground water infiltration.[4] The high cost of energy loss and system failures caused by UHDS leaks necessitate prompt and accurate detection/location and repair of these leaks. To date, however, location techniques have not been evaluated to estimate relative leak location costs.

Objectives

The objectives of this study were the following: (1) develop a probabilistic model to evaluate UHDS leak detection/location methods, (2) perform a parametric study to obtain the probabilities and expected costs of locating and repairing a leak in a shallow trench and prefabricated conduit system, and (3) identify the impact of the model's projections on the life cycle costs of these systems.

Approach

The characteristics of shallow trench (ST) and direct buried (DB) systems were described, leak location techniques were reviewed, and life cycle cost components of ST and DB were identified and compared. A model was created to estimate success probabilities for leak location methods appropriate to each system. The model was also used in a parametric study to estimate leak location and repair costs for ST

---

[1] *Facilities Engineering and Housing Annual Summary of Operations: Vol III: Installations Performance, Fiscal Year 1989* (Department of the Army, Office of the Chief of Engineers, 1990).

[2] *Heat Distribution Systems Life Cycle Cost Analysis,* Final Report, Report 130319 (PanAm World Services, Inc., July 1985).

[3] K. Cooper, C. Marsh, and E. Segan, *Evaluation of Techniques for Locating Leaks in Underground Heat Distribution Systems,* Technical Report M-86/16/ADA172107 (U.S. Army Construction Engineering Research Laboratory [USACERL], August 1986).

[4] E. Segan and C. Chen, *Investigation of Tri-Service Heat Distribution Systems,* Technical Report M-347/ADA145181 (USACERL, June 1984).

and DB systems. The probabilities and costs of the different leak location methods were allowed to vary because the exact values are not known. The parametric study was used to discuss the effects of leak location costs on life cycle costs for both systems.

Mode of Technology Transfer

It is recommended that the results of this study be used in the revision of Corps of Engineers Guide Specification (CEGS) 02695, *Underground Heat Distribution Systems*; Air Force Engineering Technical Letter 88-6, *Heat Distribution Systems Outside Buildings*; and CEGS 02696, *Heat Distribution Systems Outside of Buildings—Concrete Shallow Trench Systems.*

2 GENERAL CONFIGURATION OF UNDERGROUND HEAT DISTRIBUTION SYSTEMS

Two types of UHDS are used by Department of Defense (DOD) installations—prefabricated conduit (direct buried) systems and shallow trench systems. The supply and return lines of prefabricated steel conduit systems approved for Class A sites[5] by the DOD are buried directly in the ground. These lines can share the same protective conduit or have separate conduits. In either case, however, the carrier pipe is insulated and usually has an annular air space between its insulation and the inside wall surface of the conduit (Figure 1). This air space is to provide a means to drain and dry the system. Steel conduits are protected from the surrounding environment by a coating applied to the exterior surface. The combination of carrier pipe and conduit pipe allows three possible leak locations—carrier pipe, conduit pipe, or both. Because locating DB system leaks accurately can be so difficult, trained personnel using sophisticated equipment are often required.

The ST system approved by the DOD for Class B sites[6] provides an alternative to the DB system. The supply and return lines of an ST system are set in a concrete trench under removable concrete top slabs (Figure 2). These slabs, often used as a sidewalk, can be easily removed to expose the piping for inspection and/or repair of the system. The pipes are usually supported either by steel rollers on the floor or by U-bolt hangers to allow for thermal expansion of the pipes. As with the DB system, both the supply and return lines are insulated. However, although they are usually covered with an aluminum jacket, no conduit per se is required because the concrete trench provides the protection needed for the carrier pipe. The conduit's absence decreases the number of possible leak locations in the ST system. Sophisticated leak detection methods are not needed; instead, a systematic random or sequential method can be used effectively.

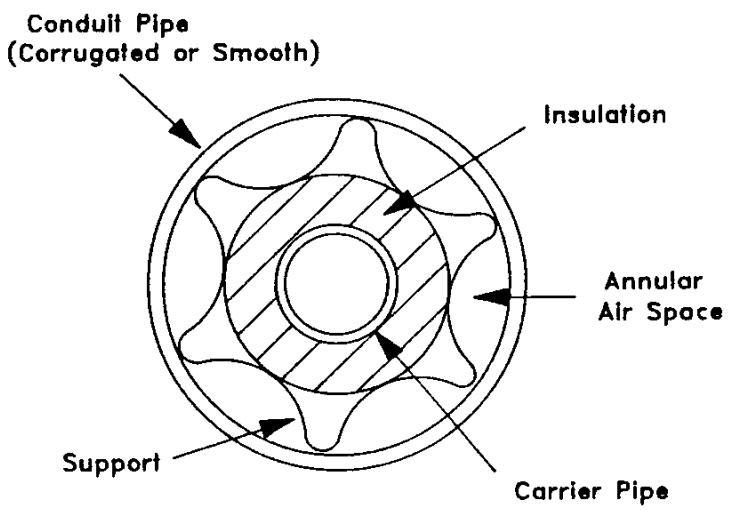

Figure 1. Typical Cross Section of Prefabricated Conduit Systems.

[5] Corps of Engineers Guide Specifications (CEGS) 02695, *Preapproved Underground Heat Distribution System* (U.S. Army Corps of Engineers [USACE], May 1991).

[6] Corps of Engineers Guide Specifications (CEGS) 02696, *Heat Distribution Systems in Concrete Trenches* (USACE, June 1990).

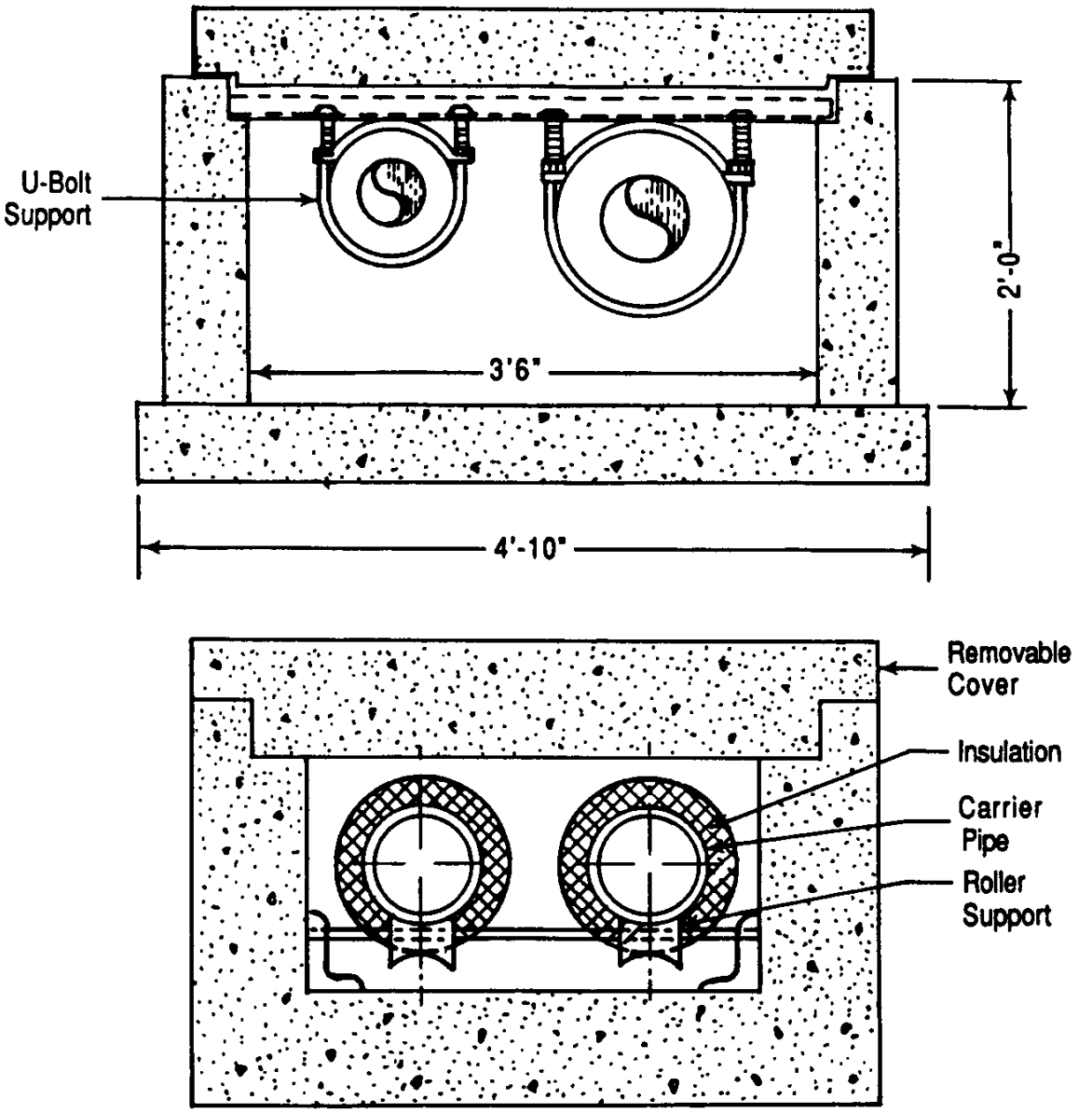

Figure 2. Typical Cross Section of Shallow Trench Systems.

3 LEAK LOCATION METHODS FOR UNDERGROUND HEAT DISTRIBUTION SYSTEMS

Visual Detection

Visual detection is the simplest method of locating a leak in a UHDS. The surface is inspected for the presence of melted snow or burnt grass, indicators of apparent heat loss. However, visual detection is much less reliable than other leak location methods.[7] As will be discussed below, surface leak indicators may not reflect the exact location of the leak in the system. But, although visual detection is not as accurate as infrared, acoustic emission, and tracer gas methods, it does provide a starting point for the leak location process and should not be discounted as too simple.

Random Search

The random search technique is another method of leak location. For the ST system, the slab covers are randomly removed with a backhoe until the leak is located. For the DB system, the pipes are randomly excavated until the leak is found. The probability of finding the leak is equal for each attempt, assuming no information concerning the leak's location is gained in the process. However, randomly searching the DB system can be very expensive because, theoretically, the entire system could be excavated before the leak is found.

Sequential Search

Another method of UHDS leak location is the sequential, or bisection, search. The directional flow of the leakage must be known if this method is to be used. A correctly installed UHDS will have a designed slope. Leakage in a HTHW system flows down the slope away from the leak; in a steam system, the escaping steam filters up the slope away from the leak. The sequential search is started at the midpoint, between two manholes, of a section where a leak has been detected. The half indicating leakage flow is inspected, and the other half is ignored. The process is then repeated with the half that was kept, and the bisection continues until the leak is found. Since leakage flow information is required to implement a bisection search, its feasibility for DB systems is questionable, but the method should be implemented with ST. Bisection is not often used for a conduit leak because no information is available about the direction of the leak.[8] The bisection method is also not useful for carrier pipe leaks. Each attempt would involve digging to expose the possibly failed section, cutting into the conduit to expose the carrier pipe, and looking for indicators of the leakage direction. Although this method is very time consuming, given directional indications it is more efficient than the random search method for DB systems.

Infrared Thermography

Three moderately successful leak location methods apply only to the DB system.[9] The first, infrared thermography (IR), involves measuring the temperature profile of the ground above the pipeline. Hot

---

[7] K. Cooper, C. Marsh, and E. Segan; S. Maloney, R. Scholze, and J. Bandy, *Preventing Water Loss in Water Distribution Systems: Money-Saving Leak Detection Programs*, Technical Report N-86/05/ADA167556 (USACERL, March 1986).

[8] E. Segan and C. Chen

[9] K. Cooper et al.

spots associated with leaks are detected with either a digital temperature-reading device or a sophisticated imaging system. IR has the following advantages over other leak detection methods:

1. Shutdown of the UHDS is not required.

2. The video image can be manipulated to permit easy viewing and interpretation.

3. A single scan of the ground surface can give a complete record of the piping condition.

4. Any variance in pipeline placement can be detected from an IR scan.

5. IR thermometers are fairly inexpensive.

IR has the following disadvantages:

1. For HTHW and steam systems, accurate leak location can be difficult because the hot water spreads into the surrounding soil and obscures the image.

2. Accuracy is limited when the leak occurs only in the conduit or carrier pipe, there are multiple leaks, and/or conduit and carrier leaks occur at different locations.

3. IR signals can be attenuated by water or snow if the leaking pipes are too deeply buried.

4. The basic imaging system is expensive.

5. Accuracy of IR thermometers is questionable.

Tracer Gas

Tracer gas (TG) is another commonly used method of leak location. It is the usual method for finding a conduit leak, but it can also be used for a carrier pipe leak. It involves introducing gas, such as sulfur hexafluoride (SF_6), into the piping system and monitoring its concentration with a gas chronometer or flame ion-capturing (FIC) device at the ground surface or at seepage holes along the pipeline. Like the infrared method, tracer gas also has advantages and disadvantages compared to more commonly used leak detection methods. Some advantages:

1. TG is a promising technique for conduit leaks in double-walled piping systems.

2. Base unit prices are much lower than those of IR systems.

3. The heating system can be operational during a conduit leak test.

The disadvantages of the TG system:

1. The gas can take the path of least resistance through the soil to the surface and thus inaccurately locate the leak.

2. Differences in gas diffusion rates through various soils can cause inaccurate readings.

3. Combustible gas (such as SF_6) is often prohibited due to the danger of explosion.

4. The system must be shut down when testing for a carrier pipe leak.

5. A single test will not detect multiple leaks in a system.

Acoustic Emission

Acoustic emission (AE) can be used effectively in locating DB system leaks.[10] This method relies on the acoustic waves that occur when hot water or steam escapes from a leak in the piping system. These leaks can be detected by either touching the pipe with a sensing microphone or contacting the conduit with an acoustic wave guide. Another AE method involves simultaneously sampling the leak noise from two locations. A series of time shifts are applied until the difference in propagation times has been compensated for. Once these specific time shifts are known the leak can be located. AE has advantages and disadvantages. The advantages include the following:

1. The system does not have to be shut down during testing.

2. AE is one of the more accurate methods of leak detection.

Some disadvantages:

1. The computerized equipment used to do the correlations is expensive.

2. Highly trained personnel are necessary for accurate leak location.

---

[10] D.S. Kupperman and D.E. Karvelas, *Acoustic Leak Detection for District Heating Systems*, ANL 87-60 (Argonne National Laboratory Report, February 1988).

4 LIFE CYCLE COST COMPONENTS OF UNDERGROUND HEAT DISTRIBUTION SYSTEMS

Those tasked with designing or replacing a UHDS must consider a number of each system's characteristics. The Army requires that designers make a life cycle cost evaluation to identify trade-offs between ST and DB systems.

In general, comparing the costs of DB and ST heat distribution systems includes three components: (1) capital costs or construction costs, (2) operating costs (primarily reflecting each system's heat loss), and (3) maintenance costs (including inspection, leak location, and repair). Two studies will be referenced: a study by Pan Am World Services commissioned by the Tri-Service Committee[11] and a study by Parsons commissioned by a consortium of DB conduit manufacturers.[12] These studies conflict considerably with one another concerning analytical approach, details of calculations and, not surprisingly, conclusions. The following discussion should make it clear that the choice between DB and ST is not obvious. Somewhat more attention will be given to the maintenance cost component, and more details of the controversy will be given since they will affect the modeling effort and subsequent parametric study.

Capital/Construction Costs

For the most part, neither DB nor ST has a capital cost advantage. There is disagreement regarding construction cost because it depends on the actual price of conduit (market prices versus bid prices), pipe diameter (cost advantage is greatest for DB systems at smaller pipe diameters), and the particular installation. Other points of debate include the required frequency of welds, the need for cathodic protection against corrosion for DB, and details of construction operations. The Pan Am study found ST to have up to a 6 percent cost advantage over DB. However, this advantage was not sustained when the pipe sizes were below 6 in.* for steam and 3 in. for condensate. According to the Parsons study, the construction cost advantage for DB was about 25 percent for a 6-in. hot water system and about 7 percent for a 12-in. system. Since the capital costs are approximately $2 million per mile, the differences can range from $120,000 per mile in favor of ST to $500,000 per mile in favor of DB.

Operating Costs

There is also very little agreement about operating costs because the studies' analytical approaches and assumptions are radically different. The dispute concerns heat loss of conduit buried underground compared with heat loss from insulated pipes suspended in a concrete trench near the ground surface. There are several ways to make the comparison. Using field data and experimental data, the Pan Am study reported a significant advantage for ST. The nominal cost of heat loss for ST was $39,000 per mile of pipe, whereas DB system heat loss ranged from 30 to as much as 400 percent higher. In marked contrast, the Parsons study used a calculation, not field data, and found the opposite was true; that is, DB system heat loss was from 10 to 30 percent lower than ST. These results depended on assumptions about pipe size, insulation thickness and moisture content, and whether the system was hot water or steam.

---

[11] *Heat Distribution Systems Life Cycle Cost Analysis—Comparison Between Direct Furied and Shallow Trench Systems*, Report No. 130319 (Pan Am World Services, Inc., July 1985).

[12] Ralph A. Parsons, Co., *Life Cycle Cost Analysis—Comparison Between Direct Buried Conduit and Shallow Concrete Trench Underground Heat Distribution Systems* (Ralph A. Parsons Co., 1986).

* Metric conversions are provided on p 23.

The explanation for the ST advantage is that DB does not always perform as well in practice because wet insulation (e.g., if groundwater penetrates the conduit pipe or insulation) causes greater heat loss than predicted. Once wetting occurs, there is little opportunity for the insulation to dry completely. Also, failure (occurrence of leaks) appears to have been more frequent for DB systems, and such leaks are more difficult and expensive to find than ST system leaks. Therefore, DB systems tend to be found more often in a deteriorated state, which increases their operating costs. In contrast, ST insulation rarely becomes wet, and if it should, it dries out more readily because it is suspended in the trench. In addition, if ST insulation needs to be replaced, the costs are less than DB for equivalent pipe sizes and operating temperatures because extensive excavation is not needed.

Maintenance Costs

Clearly, if proper maintenance is not done and leaks are permitted to occur, operating costs increase in a variety of ways, due both to the leaks themselves and to increased heat loss through the pipe walls. Regular maintenance is much less expensive for an ST system because it requires only a visual inspection with a light at a manhole. By comparison, DB system maintenance involves regular activities to verify the system's integrity, such as removing drain plugs to check for leakage, checking vents for steam escaping, and performing conduit pressure tests. Also, the cathodic protection systems should be examined regularly. Once a leak has been detected, the DB system should be pressure tested to determine whether the leak is in the conduit or carrier pipe. If DB system leak location costs are excluded, the inspection cost would be about the same for DB and ST. If a failure has occurred, the DB inspection cost is greater due to the cost of pressure testing, although the Parsons study refers to these costs as insignificant in comparison with the differences between ST and DB in capital and operating costs.

5 LEAK LOCATION MODEL

Neither the Pan Am nor the Parsons study included a leak location and repair model, although their capital cost models and operating cost models were fairly detailed. The development of such a model is an objective of this study. Probabilistic modeling is required because many events which occur during leak location are uncertain. Several expressions were developed for the expected cost of leak location and repair, assuming a leak had occurred. Then values for failure rates for DB and ST systems could be employed to obtain an unconditional expected cost. The cost model accommodated different lengths between manholes, various assumptions on leak-sensing equipment effectiveness, and different costs of deploying equipment.

Realistic numbers were introduced so a credible conclusion could be drawn, but the model is presented in such a form that other parametric studies can be done. The model can also be easily modified and included in a comprehensive study of the total life cycle costs for either system. First, a model to estimate the expected cost of leak location for ST is presented. Because the model assumes that a bisection search is used to find the leak, the main concern is getting an expression for the expected number of slabs to be lifted; the cost calculation is then straightforward. Then a model for the expected cost of leak location for DB is presented. Because the model assumes that a variety of sensing devices are used to locate leaks, the formulas reflect their effectiveness and costs.

Cost Of Leak Location For Shallow Trench Systems

When a manhole inspection reveals a leak, the problem is how to locate the particular slab over the leak so a repair can be made. An attractive approach is to use a bisection method in which every slab removal suggests which direction to search next. It is realistic to assume such disclosure because ST systems are installed with a grade between manholes. Thus, once a slab is removed, the direction of the leak can be deduced from the directional flow of water or steam.

The bisection search converges on the leak very quickly. For instance, for a 400-ft long section covered with 40 slabs each 10-ft long, the search for the leak will require lifting between 4 and 5 slabs. To be precise, the expected number of slabs to be lifted is 4.57. The maximum number of slabs lifted is 6, and this will occur in only 22 percent of the searches. The derivation for the probability distribution of the number of slabs lifted (N_b) in the bisection search is given in Appendix A. The probability (p) that exactly i slabs will be lifted in the search of a branch of length n slabs is Prob(N_b = i) or

$$p_n(i) = (1 - 1/n)\, p_{n'}(i - 1) \qquad \text{[Eq 1]}$$

where $n' = (n - 1)/2$ and n is odd. When n is even

$$p_n(i) = [n'\, p_{n'}(i - 1) + n''\, p_{n''}(i - 1)]/n \qquad \text{[Eq 2]}$$

where $n' = (n/2) - 1$ and $n'' = n/2$. When n (the number of slabs in the section) is known, these expressions can be used recursively to obtain $p_n(i)$ for all n and i, starting with $p_1(1) = 1$. Then the expected number of slab lifts (E) can be calculated as

$$E(N_b) = \sum_{i=1}^{n} i\ p_n(i). \qquad \text{[Eq 3]}$$

The authors could not obtain a closed-form expression for this expected value, but its computation is trivial. Because of the rapid convergence of the bisection search, the $p_n(i)$ is zero for a sufficiently large i value; for instance, for n = 125, $p_n(i) = 0$ for $i > 7$. In fact, the maximum number of tries possible in a bisection is given by the largest i satisfying $2^{i-1} < n$. Some selected results for $p_n(i)$ and $E(N_b)$ are given in Table 1. This table has an important economic consequence because the expected cost of finding a leak will depend in part on $E(N_b)$, which does not grow linearly with n, the length of the branch being searched. In fact, for typical distances between manholes (usually 300 ft), the expected number of slabs to be lifted will be fewer than 5.

By contrast, one could engage in a random search in which no information is gained with each slab lifting and no search location is preferable to any other. Then the probability that exactly i slab lifts will be required in the random search (N_r), or $\text{Prob}(N_r = i)$, is

$$p_n(i) = 1/n \qquad \text{[Eq 4]}$$

since all search lengths are equally likely to occur. The probability that fewer than j slabs will be lifted is simply

$$\text{Prob}(N_r < j) = (j - 1)/n, \qquad \text{[Eq 5]}$$

Table 1

Probability of Success on ith Try in Search of n Slabs and Expected Number of Tries

				pn(i)					E(Nb)
n	i = 1	i = 2	i = 3	i = 4	i = 5	i = 6	i = 7	1 = 8	
1	1.0	-	-	-	-	-	-	-	1.0
10	0.1	0.2	0.4	0.3	-	-	-	-	2.9
15	0.0667	0.1333	0.2667	0.5333	-	-	-	-	3.27
20	0.05	0.1	0.2	0.4	0.25	-	-	-	3.7
30	0.0333	0.0667	0.1333	0.2667	0.5	-	-	-	4.13
40	0.0250	0.05	0.1	0.2	0.4	0.225	-	-	4.58
50	0.02	0.04	0.08	0.16	0.32	0.38	-	-	4.86
100	0.01	0.02	0.04	0.08	0.16	0.32	0.37	-	5.8
125	0.008	0.016	0.032	0.064	0.128	0.256	0.496	-	6.04
200	0.005	0.01	0.02	0.04	0.08	0.16	0.32	0.365	6.77

and the expected number of slab lifts in a random search is

$$E(N_r) = (n + 1)/2. \qquad \text{[Eq 6]}$$

Although the results for the random search are well known, they are included in Appendix A for the sake of completeness. The expected value for N_r also has important economic consequences. If information cannot be gained with each try, the cost of finding a leak has a component which is linear with the distance between manholes. This concept is shown in Appendix A, Figure A1, with the accumulative probability for the bisection search for comparison (note the quick convergence of the bisection search compared to that of the random search). For the DB system, the consequences are serious since the direction of the leak generally is not apparent after excavation. Sensing devices, which are expensive to deploy, are required to prevent extensive excavation during the search for a leak.

With the expected number of slab lifts known, the cost estimation of leak location and repair in a ST system is straightforward. The components are c_f, the fixed cost to deploy equipment (such as a backhoe), and c_{rst}, the cost of repairing the leak in ST piping. In this context, "deploy" means to bring the appropriate equipment to the site but not engage it in the search. That cost of searching, or lifting each slab, is expressed by c_s. Thus, the expected value of the cost of repairing a leak (C_{st}) is

$$E(C_{st}) = c_f + c_{rst} + c_s E(N_b). \qquad \text{[Eq 7]}$$

If a random search is employed instead of a bisection search, $E(N_b)$ is replaced with $E(N_r)$. For the parametric study presented in Chapter 6, values were assigned to these costs; they are given in Appendix B.

Cost of Leak Location for Direct Buried Systems

For a DB system, the model for estimating the cost of finding and repairing a leak is entirely different because excavation is required at each candidate location for the leak and because information generally is not available to correctly determine the future search direction. Various forms of sensing are used to determine leak locations.[12] Sensing now takes the following forms: (1) ground surface observation, (2) infrared thermography, (3) tracer gas, and (4) acoustic emission. If all of these fail, an excavation, which is essentially a random search, might follow; bisection usually is not possible because of the limited information gained at each excavation. The sensing methods have varied probabilities of success in finding a leak, and their costs can differ. After the cost model is developed, results of a parametric study will be presented in Chapter 6 to compare the costs of DB and ST leak location and repair under various assumptions.

Conduit Leak Detection

The cost of locating and repairing a conduit leak will be developed first. The search sequence follows the flowchart shown in Figure 3. The model can easily be modified to accommodate other sensing

[12] K. Cooper et al.

devices and search sequences. The first attempt to locate the leak is a visual search. The excavation which follows will have some probability of not finding the leak, at which point an IR search will commence. Assume that the IR scan suggests three locations for a leak; if the excavations are unsuccessful, a TG test is carried out. If the location suggested by TG does not reveal a leak, a random search is carried out to find the leak. In the parametric study presented in Chapter 6, if the probabilities of success of these leak location techniques are high enough that the cost of the random search is incurred with a low probability, the contribution of the random search will add very little to the cost. The leak is eventually found, so the cost of repairing the leak in the conduit pipe (C_{con}) is eventually incurred. The expected (E) cost takes the form

$$E(C_{con}) = c_r + c_{ef} + (1 - p_v)\ \{c_{irf} + (c_{ir} + c_e) \sum_{i=1}^{3} i\ p_{ir}(i) + [1 - \sum_{i=1}^{3} P_{ir}(i)][(c_{tgf} + c_{tg} + c_e) + (1 - p_{tg})c_e E(N_r)]\} \qquad \text{[Eq 8]}$$

where p_v is the probability of the visual search being successful, $p_{ir}(i)$ is the probability of the IR search being successful on the ith try, and p_{tg} is the probability of the TG search being successful. (If several attempt locations were suggested by the TG, the formulation would follow that of IR.) The cost of repairing the leak is c_r, the cost of deploying the excavation equipment and excavating the visual location is c_{ef} and the cost of each additional excavation is c_e. The costs of deploying the IR and TG equipment are c_{irf} and c_{tgf}, respectively; the costs of each IR and TG search are c_{ir} and c_{tg}. If a bisection search could be carried out somehow, when the sensors failed to find the leak, $E(N_b)$ would replace $E(N_r)$. This possibility was examined during the parametric study, but it made very little difference. The values for probability of success of the sensors were such that eventual simple excavation (using either a random or bisection search) occurred with low probability.

Carrier Pipe Leak Detection

The cost model for locating and repairing a carrier pipe leak has a very similar form, with the possible exception of finding the leak using AE. Also, some of the costs differ because a window has to be cut through the conduit pipe so the carrier pipe can be inspected to find the leak. The expected cost (E) to locate and repair a carrier pipe (C_{car}) leak takes the form

$$E(C_{car}) = c'_r + c'_{ef} + (1-p_v)\ \{c_{irf} + (c_{ir} + c'_e)\sum_{i=1}^{3} i\ p_{ir}(i) + [1 - \sum_{i=1}^{3} p_{ir}(i)][(c_{acf} + c_{ac} + c'_e) + (1-p_{ac})(c_{tgf} + c_{tg} + c'_e) + (1 - p_{ac})(1 - p_{tg})c'_e E(N_r)]\}. \qquad \text{[Eq 9]}$$

Here the primed cost term (c'_e) refers to additional operations required to locate leaks and repair leaks in the carrier pipe, which is located inside the protective conduit. The probability of success with AE equipment is p_{ac}, the cost of deploying it is c_{acf} and the cost of an AE search is c_{ac}.

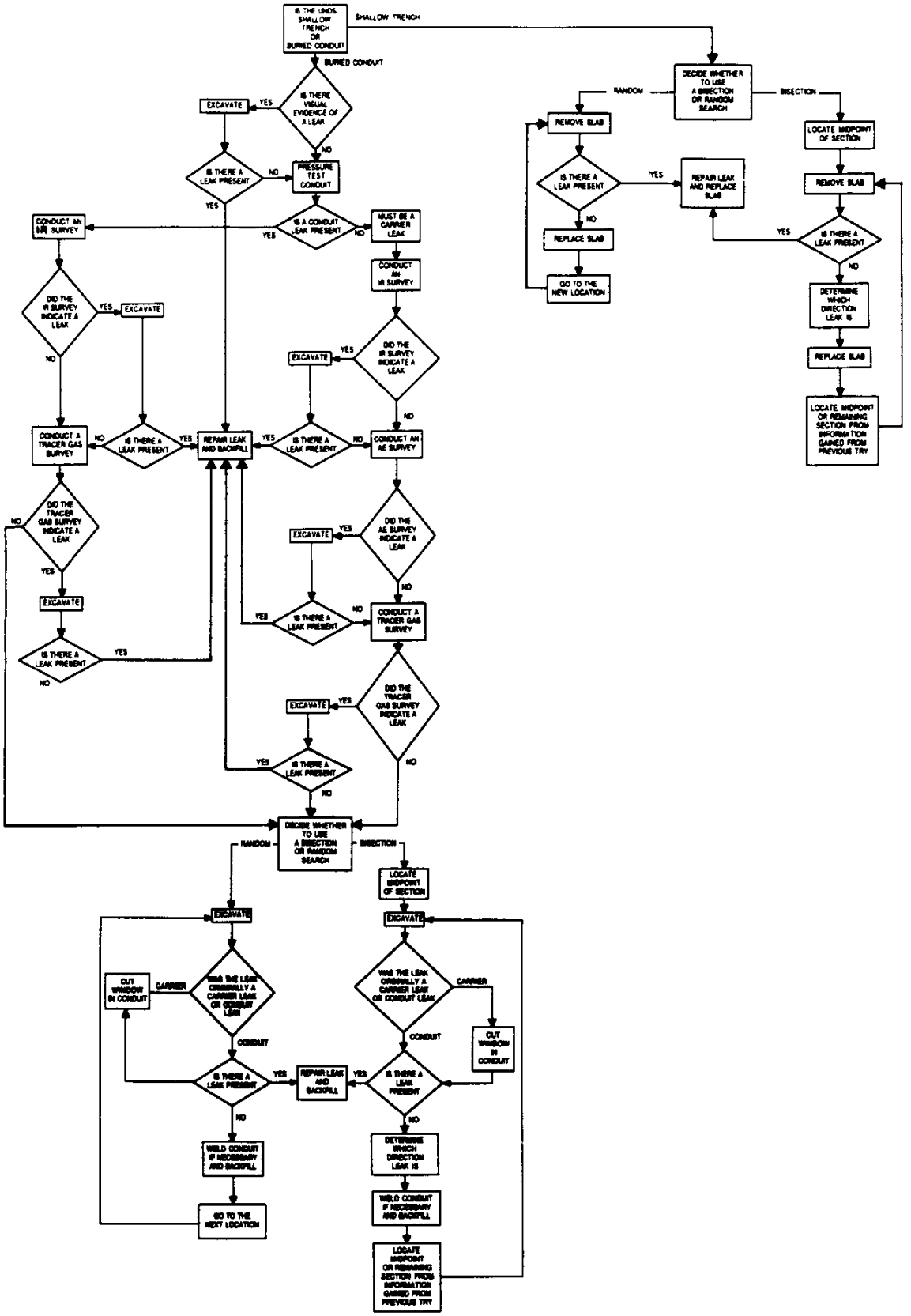

Figure 3. Decision Flowchart for Locating and Repairing Underground Heat Distribution System Leaks.

The model clearly shows that sensor deployment can be sequenced to minimize costs, which represents a trade-off between probability of success and cost of deployment and operation. Obviously, the visual search is the least expensive alternative, but a possibly large number of expensive excavations could result from its exclusive use. At this point, no particular claims are being made about the optimal sequence of sensor use because their cost estimates vary and because there is little reliable information on their effectiveness. As was stated earlier, however, the model can be modified to accommodate any sequence of sensors deemed applicable.

A probabilistic issue which has been avoided is the independence of events that occur during a search. There could be some question about whether failures of visual search, IR, and TG are independent events. Briefly, if the path for hot water to the surface of the ground is not directly above the leak, one might expect the probability of failure to TG to depend on whether the visual search or the IR search fails.

6 PARAMETRIC STUDY OF EXPECTED COSTS

Numerical values were assigned to the terms in Equations 7, 8 and 9 to obtain an estimate of the relative magnitudes of the expected costs for DB and ST systems. These equations give the expected cost of finding and repairing a leak, given that one is known to exist in a section of pipe between manholes. A failure rate reflecting the frequency of leak occurrence will be introduced later in the calculation so costs can be expressed as dollars per year per mile of pipe.

For this example, the length of pipe between manholes is 300 ft, the slab length is 10 ft, and the length of pipe exposed during excavation is 15 ft. Thus, n = 30 for the ST calculation, and n = 20 for the DB calculation. The example assumes that in DB systems conduit leaks and carrier pipe leaks are equally likely to occur; this makes the expected cost per leak in a DB system the average of $E(C_{con})$ and $E(C_{car})$.

Although UHDS repair expenditures indicate that leaks are a common occurrence, little reliable failure rate information is available, which was noted in both the Parsons and Pan Am studies. The available data indicates a constant failure rate for ST but an increasing failure rate for DB. Ideally, a varying failure rate would be used for DB cost calculations, but the data is so sparse that an average failure rate was used here. Using the failure rate data presented in both the Pan Am and Parsons studies, the average number of failures per year in a 300-ft ST section would be 0.00268, and for DB it would be 0.03248. Using these failure rates with the expected costs, an estimate was made of the cost per year per section, and then the cost per year per mile.

The fact that the failure rate for DB systems is about 12 times higher than the ST failure rate is a matter of concern. This implies that the service life for DB is much shorter than for ST, so that any initial DB construction cost advantage could be outweighed by the need for earlier replacement during the life of the system. On the other hand, it is possible that the increasing failure rate for DB is characteristic of older conduit designs. Newer designs and methods of manufacture might exhibit lower failure rates and longer service life. It is important to view the results of the repair cost study presented here in the context of the controversy permeating almost every aspect of the cost analysis.

The cost estimates used in the parametric study are stated in Appendix B. Many of the estimates, particularly those regarding excavation, labor, welding, and materials, were taken from the Pan Am study, which had very detailed analyses of a variety of construction and repair operations. Cost for deploying sensing equipment were estimated based on conversations with vendors and maintenance personnel. These costs were varied during the study, without any striking difference in conclusions. Estimates of the effectiveness of the sensors (probability of successful leak location) are simply informed guesses. As a beginning, the study assumed that visual inspection pinpoints the leak with probability 0.1 ($p_v = 0.1$), and the IR scan finds the leak on the first, second, and third try with probabilities of 0.5, 0.1, and 0.1, respectively ($p_{ir}(1) = 0.5$, $p_{ir}(2) = 0.1$, $p_{ir}(3) = 0.1$). It was also assumed that AE and TG can find and repair a leak with probability 0.5 ($p_{ae} = 0.5$, $p_{tg} = 0.5$). The expected cost to find and repair a leak for ST was $1487 (based on Equation 7) compared with $8474 (based on Equations 8 and 9) for DB. When the average failure rates given above are considered, the cost advantage of ST was $4770 per mile per year.

If improved sensor effectiveness is assumed, (e.g., $p_v = 0.2$, $p_{ir}(1) = 0.9$, $p_{ir}(2) = 0$, $p_{ir}(3) = 0$, $p_{ae} = 0.9$, and $p_{tg} = 0.9$), the cost advantage of ST decreases to $3850 per mile per year. With sensor effectiveness at $p_v = 0.1$, $p_{ir}(1) = 0.5$, $p_{ir}(2) = 0$, $p_{ir}(3) = 0$, $p_{ae} = 0.5$ and $p_{tg} = 0.5$, the cost advantage of ST increases to $5560 per mile per year. Some cost variations of using and deploying the sensors were also considered, but the results are not significant and are not reported here. More exact estimates of the costs and effectiveness are desirable, but unless they are drastically different from the ones used here, the conclusions will not differ greatly.

The actual cost estimate of $4770 per mile per year will be used to assess DB leak location costs. It is important to emphasize that the leak's existence must be ascertained before it can be repaired. Although this premise seems transparently obvious, the required UHDS inspections are not always carried out.[13] Furthermore, if the drain plugs are not installed in the end plates or the vents are improperly installed in the DB system, the time and cost to determine whether a leak has occurred can escalate. If these maintenance and repair costs are not incurred, the increased heat loss from a leaking carrier or conduit pipe will increase operating costs dramatically due to the increased failure rate.

[13] Pan Am World Service, Inc.

7 CONCLUSIONS

Cost models were developed to compare leak locations and repair costs for ST and DB heat distribution systems. Leak location is simple for ST systems since it can rely on a visual search, employing a bisection method to determine which slabs to lift. The average number of slabs to be lifted will rarely exceed five, so the costs are not great. Visual evidence is often inconclusive for DB systems, but a variety of sensors can be brought to bear on the problem of leak location. The cost and effectiveness of these sensors are not known precisely, but a parametric study indicated that the cost advantage for ST systems is approximately $4770 per year per mile. UHDS operators should be prepared to make these expenditures each year because the increase in operating costs for a DB system in poor repair can escalate dramatically.

NOTATION

AE	= acoustic emission
c_{ae}	= cost of each AE search
c_{aef}	= cost to deploy AE equipment
c_{ir}	= cost of each IR search
c_{irf}	= cost to deploy IR equipment
c_e	= cost of each additional excavation
c_{ef}	= cost to deploy excavating equipment and make one excavation for a DB system
c_f	= cost to deploy excavating equipment to life ST slabs
c_r	= cost of repair
c_{rst}	= cost to repair a leak in ST piping
c_s	= cost to lift a single ST slab
c_{tg}	= cost of each TG search
c_{tgf}	= cost to deploy TG equipment
$*c'$	= cost terms for DB carrier pipe (within a conduit pipe)
DB	= direct buried
$E(C_{car})$	= expected cost of leak location and repair in a DB carrier pipe, given that a leak is known to exist
$E(C_{con})$	= expected cost of leak location and repair in a DB conduit pipe, given that a leak is known to exist
$E(C_{st})$	= expected cost of leak location and repair in an ST trench system, given that a leak is known to exist
i	= number of the attempt
IR	= infrared

N_b	= number of slabs lifted to find a leak during a bisection search
N_r	= number of tries to find a leak during random search or excavation
p_{ae}	= probability of successful leak location with AE
p_{ir}	= probability of successful leak location with IR
p_{tg}	= probability of successful leak location with TG
p_v	= probability of successful leak location from visual search of DB
$p_n(i)$	= probability that leak is found on exactly the nth try
ST	= shallow trench
TG	= tracer gas
Σ	= summation
π	= multiplication

METRIC CONVERSION TABLE

1 ft	=	0.30 m
1 in.	=	2.54 cm
1 mi	=	1.61 km

APPENDIX A: DERIVATION OF SEARCH LENGTH PROBABILITIES

Let $p_n(i)$ be the probability that a search under a branch of n slabs takes exactly i slab lifts to locate the leak. The derivation will be given for a bisection search in which the direction of future search is determined after each try. The derivation differs slightly for an odd or even n, with only minor differences in computed values of $p_n(i)$ when n is large.

The slab at the midpoint (or on either side of the midpoint) is chosen for the first try. As a practical matter, the leak could be found by examining the slabs near the manholes during a visual inspection from within the manhole. Neighboring pipe sections can be similarly examined for leaks without actually lifting the slabs above them. Cases which shorten the search will be ignored to obtain a conservative estimate of the length of the search. It is apparent that $p_n(1) = 1/n$ under the assumption that the leak location is uniformly distributed along the branch between manholes by n slabs. The probability that the leak will not be found on the first lift is then $1 - 1/n$, and it follows that the leak must be under one of the remaining $n - 1$ slabs.

When n is odd, the remaining $n - 1$ slabs can be divided into two groups of $(n - 1)/2$ slabs each. The probability of the leak being in either group is $(n - 1)/2(n - 1)$, or $1/2$. When n is even, the remaining $n - 1$ slabs are divided into two groups of $(n/2) - 1$ and $n/2$ slabs. The probability that the leak is in each group is $[(n/2)-1]/(n-1)$ and $(n/2)/(n-1)$, respectively; of course, for large n these are very close to $1/2$.

To locate the leak upon the removal of the second slab, two events must occur: (1) the leak must not have been found on the first try, and (2) the leak must be found on the first try in the group of slabs indicated during the initial slab lift as the group to be searched next. When n is odd

$$\begin{aligned} p_n(2) &= (1 - 1/n)[(1/2)p_{n'}(1) + (1/2)p_{n'}(1)] \\ &= (1 - 1/n)p_{n'}(1) \end{aligned} \qquad \text{[Eq A1]}$$

where $n' = (n - 1)/2$. Although the notation seems redundant, it is to make explicit the idea that a search in either direction (under n' slabs) is equally likely (has probability $1/2$) and has equal probability of success on the first try, $p_{n'}(1)$. The general recursive relationship follows immediately and

$$p_n(i) = (1 - 1/n)p_{n'}(i - 1) \qquad \text{[Eq A2]}$$

with n' defined as above.

When n is even, the two groups of slabs to be searched after the initial lift are no longer equally likely, as was mentioned above. The probability that the leak will be found on the second lift is

$$p_n(2) = (1 - 1/n)[n'p_{n'}(1) + (n''p_{n''}(1)]/(n - 1) \qquad \text{[Eq A3]}$$

where $n' = (n/2) - 1$ and $n'' = (n/2)$. This can be immediately generalized to obtain the recursion for any n and i in the form

$$p_n(i) = [n' p_{n'}(i - 1) + n'' p_{n''}(i - 1)]/n. \qquad \text{[Eq A4]}$$

It can be shown that these are properly defined probability distributions; for a fixed n, the sum of $p_n(i)$ over all i equals one.

By starting with $p_1(1) = 1$ and $p_1(2) = 0$, the recursive relationships obtained above can be used to obtain $p_2(1) = 1/2$ and $p_2(2) = 1/2$, and one can proceed for $p_n(i)$ for all n and i. Some results were given earlier in the paper for large n (Table 1), but Table A1 provides some results of the recursion for small n for the interested reader. Also included is the expected value for N_b, the number of the trial at which the leak is found during a bisection search.

The important features of the bisection search are exhibited in the table. Since the bisection converges rapidly, the probability that i will be large does not grow fast with n; therefore, neither does the expected number of tries (see Figure A1). The expected number of tries for a random search, by comparison, grows linearly with the length of the branch (Figure A1).

The derivation for the random search will be put in a slightly different form so it can be used to describe the search by excavation used for DB piping. Let L be the length of the branch between two manholes where one leak is known to exist and let x be the length of the pipe exposed, either by excavation or by lifting a slab. The probability that the leak will be found on the ith try is the product of the probabilities of not having found the leak on i - 1 previous tries and the probability of finding it in the length of pipe remaining by then, which is L - (i - 1)x. If N_r is the random variable which is the number of the try on which the leak is found, then $\text{Prob}(N_r = i)$ has probability distribution for all i, as

Table A1

Probability of Success on ith Try in Search of n Slabs and Expected Number of Tries

	$p_n(i)$				$E(N_b)$
n	**i=1**	**i=2**	**i=3**	**i=4**	
1	1	-	-	-	1.00
2	1/2	1/2	-	-	1.50
3	1/3	2/3	-	-	1.67
4	1/4	1/2	1/4	-	2.00
5	1/5	2/5	2/5	-	2.20
6	1/6	1/3	1/2	-	2.33
7	1/7	2/7	4/7	-	2.43
8	1/8	1/4	1/2	1/8	2.63
9	1/9	2/9	4/9	2/9	2.78
10	1/10	1/5	2/5	3/10	2.90

$$p(i) = \{x/[L - (i - 1)x]\} \prod_{j=0}^{j=i-2} [(1 - x)/(L - jx)] \qquad \text{[Eq A5]}$$
$$= x/L$$

one would expect. Assume, without any great loss of accuracy, that L = xm where m is an integer. The probability that the leak is found in less than j tries is

$$\text{Prob}(N_r < j) = (j - 1)x/L \qquad \text{[Eq A6]}$$
$$= (j - 1)/m.$$

The expected value of N_r is

$$E(N_r) = \sum_{i=1}^{m} i\ p(i) \qquad \text{[Eq A7]}$$

$$= \sum_{i=1}^{m} i/m \qquad \text{[Eq A8]}$$

$$= (m + 1)/2 \qquad \text{[Eq A9]}$$

which means that the average number of tries grows linearly with the length of the pipe to be searched (Figure A1).

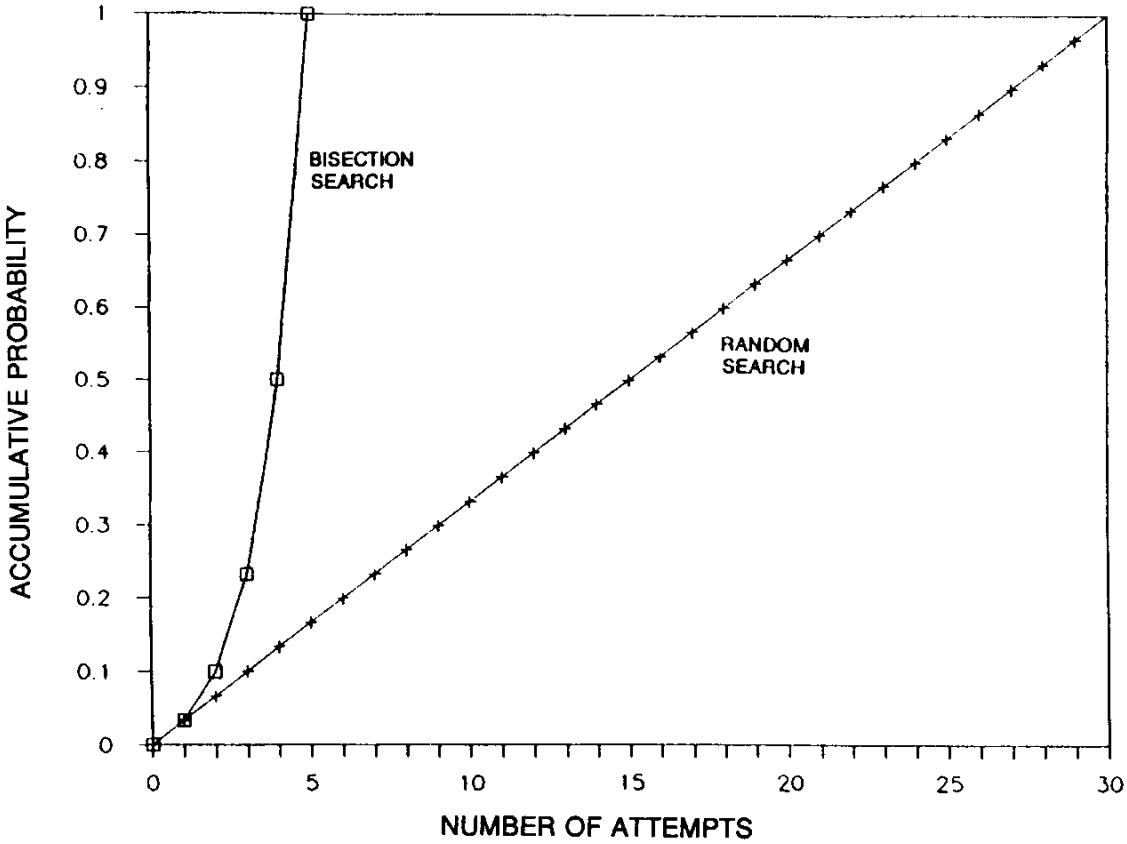

Figure A1. Accumulative Probability vs. Number of Attempts for Bisection Search and Random Search.

APPENDIX B: VALUES USED IN PARAMETRIC STUDY

Parametric study values presented in Table B1 represent cost estimates obtained from previous publications and conversations with vendors and maintenance personnel. Because the probabilities were unknown at the time, they are best guesses. The scenario described below represents what is felt to be the baseline estimates of the costs and probabilities, although many other runs of the computer model were implemented by varying these values. Due to the versatility of the computer model for calculating the expected costs, all of these values can be modified if necessary. The values for the respective costs are listed in Table B1.

The probabilities for success of each sensor are listed in Table B2.

Table B1

Values for Cost Variables

Variable	Value($)
c_f	300*
c_{rst}	777*
c_s	100*
c_{irf}	3000
c_{ir}	200
c_{tgf}	3000
c_{tg}	500
c_{acf}	5000
c_{ac}	800
c_r	2112*
c_{ef}	945*
c_e	209*
$c_{e'}$	294*

* Cost values were calculated.

Table B2

Values for Probabilities of Sensor Effectiveness

Variable	Value
$p_{ir}(1)$	0.5
$p_{ir}(2)$	0.1
$p_{ir}(3)$	0.1
p_{tg}	0.5
p_{ac}	0.5
p_{v}	0.1

USACERL DISTRIBUTION

Chief of Engineers
ATTN: CEHEC-IM-LH (2)
ATTN: CEHEC-IM-LP (2)
ATTN: CERD-L
ATTN: CECC-P
ATTN: CECW
ATTN: CECW-O
ATTN: CECW-P
ATTN: CECW-RR
ATTN: CEMP
ATTN: CEMP-M
ATTN: CEMP-O
ATTN: CEMP-R
ATTN: CEMP-C
ATTN: CEMP-E
ATTN: CERD
ATTN: CERD-C
ATTN: CERD-M
ATTN: CERM
ATTN: DAEN-ZCE
ATTN: DAEN-ZCI
ATTN: DAEN-ZCM
ATTN: DAEN-ZCZ

CEHSC
ATTN: CEHSC-ZC 22060
ATTN: DET III 79906
ATTN: CEHSC-F 22060
ATTN: CEHSC-TT-F 22060

US Army Engineer Districts
ATTN: Library (41)
Alaska 99506
ATTN: NAPEN-PL

US Army Engr Divisions
ATTN: Library (13)

US Army Europe
ODCS/Engineer 09014
ATTN: AEAEN-FE
ATTN: AEAEN-ODCS
V Corps
ATTN: DEH (11)
VII Corps
ATTN: DEH (15)
21st Support Command
ATTN: DEH (12)
USA Berlin
ATTN: DEH (9)
Allied Command Europe (ACE)
ATTN: ACSGEB 09703
ATTN: SHIHB/Engineer 09705
USASETAF
ATTN: AESE-EN-D 09613
ATTN: ACSEN 09029
ATTN: AESSE-VE 09029

8th USA, Korea
ATTN: DEH (19)

ROK/US Combined Forces Command 96205
ATTN: EUSA-HHC-CFC/Engr

Ft. Leonard Wood, MO 65473
ATTN: ATZA-TE-SW
ATTN: Canadian Liaison Officer
ATTN: German Liaison Staff
ATTN: British Liaison Officer
ATTN: Allied Liaison Office
ATTN: French Liaison Officer

USA Japan (USARJ)
ATTN: DCSEN 96343
ATTN: HONSHU 96343
ATTN: DEH-Okinawa 96376

Area Engineer, AEDC-Area Office
Arnold Air Force Station, TN 37389

416th Engineer Command 60623
ATTN: Facilities Engineer

US Military Academy 10996
ATTN: Facilities Engineer
ATTN: Dept of Geography & Environmental Engrng
ATTN: MAEN-A

AMC - Dir., Inst., & Svcs.
ATTN: DEH (23)

DLA ATTN: DLA-WI 22304

DNA ATTN: NADS 20305

FORSCOM (28)
FORSCOM Engineer, ATTN: Spt Det. 15071
ATTN: Facilities Engineer

HSC
Ft. Sam Houston AMC 78234
ATTN: HSLO-F
Fitzsimons AMC 80045
ATTN: HSHG-DEH
Walter Reed AMC 20307
ATTN: Facilities Engineer

INSCOM - Ch, Instl. Div.
Ft Belvoir VA 22060
ATTN: Engr & Hsg Div
Vint Hill Farms Station 22186
ATTN: IAV-DEH

USA AMCCOM 61299
ATTN: Library
ATTN: AMSMC-RI

US Army Engr Activity, CA
ATTN: DEH
Cameron Station (3) 22314
Fort Lesley J. McNair 20319
Fort Meyer 22211

Military Traffic Mgmt Command
Falls Church 20315
Oakland Army Base 94626
Bayonne 07002
Sunny Point MOT 28461

NARADCOM, ATTN: DRDNA-F 01760

TARCOM, Fac, Div. 48090

TRADOC (19)
HQ, TRADOC, ATTN: ATEN-DEH 23651
ATTN: DEH

TSARCOM, ATTN: STSAS-F 63120

USAIS
Fort Huachuca 85613
ATTN: Facilities Engineer (3)
Fort Ritchie 21719

WESTCOM
Fort Shafter 96858
ATTN: DEH
ATTN: APEN-A

SHAPE 09705
ATTN: Infrastructure Branch, LANDA

HQ USEUCOM 09128
ATTN: ECJ 4/7-LOE

Fort Belvoir, VA 22060
ATTN: Australian Liaison Officer
ATTN: Water Resource Center
ATTN: Engr Strategic Studies Ctr
ATTN: Topographic Engr Center
ATTN: CECC-R

CECRL, ATTN: Library 03755

CEWES, ATTN: Library 39180

HQ, XVIII Airborne Corps and Ft. Bragg 28307
ATTN: AFZA-DEH-EE

Chanute AFB, IL 61868
3345 CES/DE, Stop 27

AMMRC 02172
ATTN: DRXMR-AF
ATTN: DRXMR-WE

Norton AFB, CA 92409
ATTN: AFRCE-MX/DE

Tyndall AFB, FL 32403
AFESC/Engineering & Service Lab

NAVFAC
ATTN: Division Offices (11)
ATTN: Facilities Engr Cmd (9)
ATTN: Naval Public Works Center (9)
ATTN: Naval Civil Engr Lab 93043 (3)
ATTN: Naval Constr Battalion Ctr 93043

Engineering Societies Library
New York, NY 10017

National Guard Bureau 20310
Installation Division

US Government Printing Office 20401
Receiving/Depository Section (2)

US Army Env. Hygiene Agency
ATTN: HSHB-ME 21010

American Public Works Association 60637

Nat'l Institute of Standards & Tech 20899

Defense Technical Inc. Center 22304
ATTN: DTIC-FAB (2)

325
11/91

This publication was reproduced on recycled paper.

☆ U.S. GOVERNMENT PRINTING OFFICE: 1992—644-866